coax® data sheet - lateral valve

type PCD-1 10
PCD-2 10

09/2022

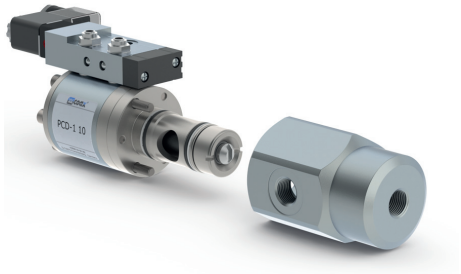

2/2-way valve	**externally controlled**	
pressure range	PN 0-200 bar	
orifice	DN 10 mm	
connection	thread/cartridge	
function	valve normally closed symbol **NC**	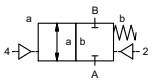
	valve normally open symbol **NO**	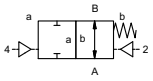
operating principle	externally controlled with spring return	
body material	⓪ aluminium	③
	①	④
	②	⑥ stainless steel
valve seat	synthetic materials on metal	metal on metal
seal materials	PU, NBR	PTFE, PE, FPM, EPDM

⚠ Above stated body materials refer to the valve port connections that get in contact with the media only!

details needed for main valve
- orifice
- port
- function NC/NO
- operating pressure/Δp
- flow rate
- media
- media temperature
- ambient temperature
- type of actuation

details needed for pneumatic actuation
- nominal voltage
- type of protection
- actuation pressure range min/max
- pilot valve type

details needed for hydraulic actuation
- actuation pressure range min/max
- hydraulic control valve function

⚠ The valves' technical design is based on media and application requirements. This can lead to deviations from the general specifications shown on the data sheet with regards to the design, sealing materials and characteristics.

⚠ If order or application specifications are incomplete or imprecise there exists a risk of an incorrect technical design of the valve for the required application. As a consequence, the physical and / or chemical properties of the materials or seals used, may not be suitable for the intended application. To avoid hydraulic shocks in pipelines, the flow velocities must be taken into account when designing valves for liquids.

general specifications			**options**
ports	PCD-1	without valve body	with valve body thread G 3/8
	PCD-2	without valve body	with valve body thread G 3/8
function		NC	NO
pressure range	PCD-1	0-50 (0-200 see pressure diagram)	NO (see pressure diagram)
	PCD-2	0-100 (0-200 see pressure diagram)	
Kv value	m³/h	3.0	
vacuum	leak rate		< 10^{-6} mbar•l•s^{-1}
pressure-vacuum	$P_1 \Leftrightarrow P_2$		upon request
back pressure	$P_2 > P_1$		upon request
media		gaseous - liquid - highly viscous - gelatinous - pasty	
abrasive media			
damping	opening		
	closing	by throttles on pilot valve	
flow direction	A ⇨ B	as marked	bi-directional upon request
switching cycles	1/min	700	
switching time	ms	opening 30-3000	
		closing 30-3000	
media temperature	°C	direct mounted pilot valve 60	remote mounted pilot valve outside
ambient temperature	°C	direct mounted pilot valve 50	temperatur range of media max. 150 °C
flush ports			
leak ports			available
limit switches			inductive
manual override		via pilot valve	
approvals			WAZ
mounting			mounting holes on valve body 2 x M6
weight	kg	PCD-1 1.1 PCD-2 1.2	PCD-1 1.7 PCD-2 1.8
additional equipment			valve body

electrical specifications			**options**
nominal voltage	U_n	DC 24 V	special voltage upon request
	U_n	AC 230 V 50 Hz	special voltage upon request
power consumption	DC	4.8 W	2.5 W (actuation pressure range 4-7 bar)
	AC	pick up 11.0 VA holding 8.5 VA	
protection	IP65 (P54)	acc. DIN 40050	
energized duty rating	ED	100%	
connection		plug acc. DIN EN 175301-803 form B, 2 positions x180° / wire diameter 6-8 mm	
optional	M12x1	connector acc. DESINA	connector acc. VDMA
additional equipment		illuminated plug with varistor	
max. temperature	media	60°C	
	ambient	50°C	
explosion proof	E Ex e II T5	nominal voltage U_n	DC 24 V 3.25 W
		power consumption	AC 230 V 50 Hz 2.90 W

pneumatic specifications			**options**
actuation pressure range	bar	4-8	
air consumption	cm³/stroke	PCD-1 7 PCD-2 17	
cycle speed		main valve speed variable by throttleson pilot valve	
control		preferably 5/2 way pilot valve	
pilot valve interface			
actuator ports	2/4	G 1/8	

hydraulic specifications			**options**
actuation pressure range	bar	10-30	> 30 bar upon request
control		preferably 4/2 way control valve	
actuator ports	X/Y	G 1/4 via adapter	NPT 1/4 via adapter
by media			

■ specifications not highlighted are standard
specifications highlighted in grey are optional

müller co-ax gmbh • Friedrich-Müller-Str. 1 • 74670 Forchtenberg • Germany • fon +49(0)7947/828-0 • fax +49(0)7947/828-11 • Email info@co-ax.com

coax® data sheet - lateral valve

type PCD-1 10
PCD-2 10

function: **NC**
closed when not energized

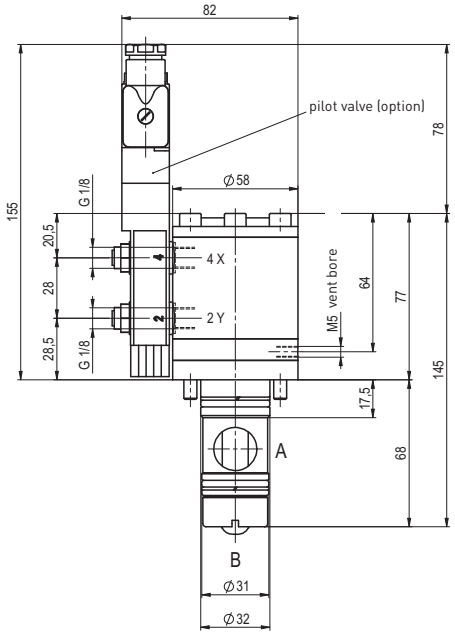

function: **NO**
open when not energized

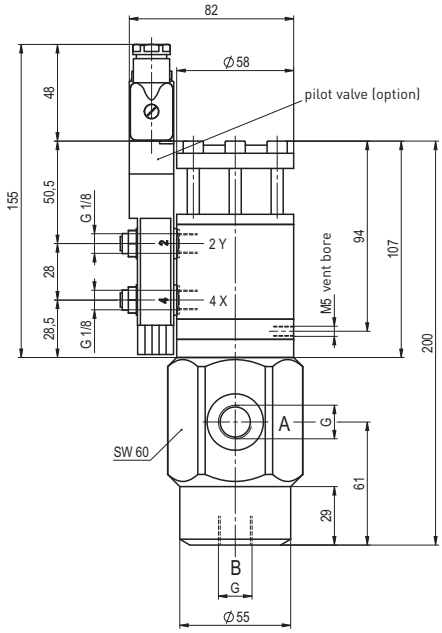

drilling design for cartridge

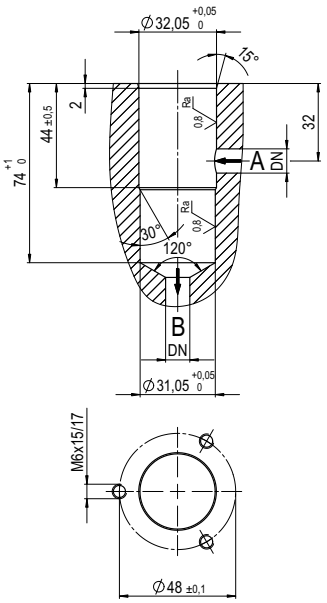

pneumatic specifications

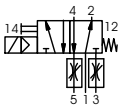

5/2 way pilot valve
flow rate 350 l/min
pressure range 3-10 bar G 1/8

pressure-diagram

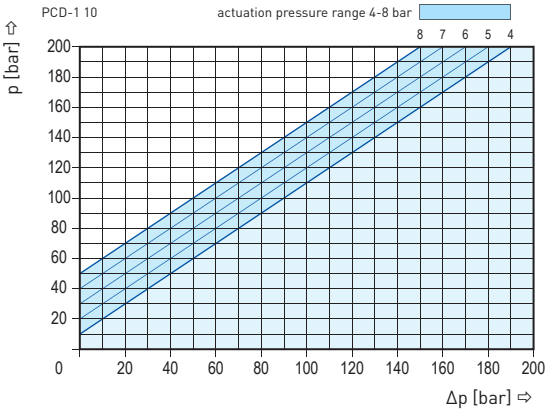

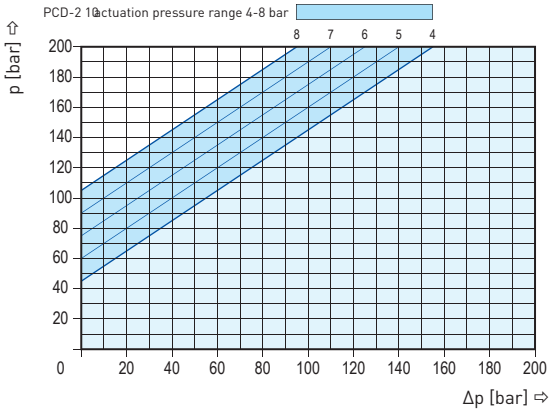

müller co-ax shall retain the rights to these documents. Modifications to the documents are strictly prohibited.
Rights reserved to make technical alterations • Not responsible for printing errors • Detailled drawings can be obtained upon request

coax® data sheet - lateral valve

type PCD-3 10

09/2022

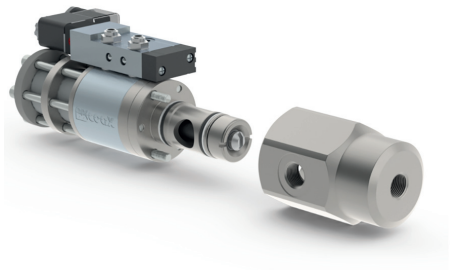

2/2-way valve	**externally controlled**	
pressure range	PN 0-200 bar	
orifice	DN 10 mm	
connection	thread/cartridge	
function	valve normally closed symbol **NC**	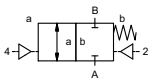
	valve normally open symbol **NO**	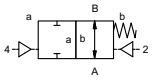
operating principle	externally controlled with spring return	
body material	⓪ aluminium	③
	①	④
	②	⑥ stainless steel
valve seat	synthetic materials on metal	metal on metal
seal materials	PU, NBR	PTFE, PE, FPM, EPDM

⚠ Above stated body materials refer to the valve port connections that get in contact with the media only!

details needed for main valve

- orifice
- port
- function NC/NO
- operating pressure/Δp
- flow rate
- media
- media temperature
- ambient temperature
- type of actuation

details needed for pneumatic actuation

- nominal voltage
- type of protection
- actuation pressure range min/max
- pilot valve type

details needed for hydraulic actuation

- actuation pressure range min/max
- hydraulic control valve function

⚠ The valves' technical design is based on media and application requirements. This can lead to deviations from the general specifications shown on the data sheet with regards to the design, sealing materials and characteristics.

⚠ If order or application specifications are incomplete or imprecise there exists a risk of an incorrect technical design of the valve for the required application. As a consequence, the physical and / or chemical properties of the materials or seals used, may not be suitable for the intended application. To avoid hydraulic shocks in pipelines, the flow velocities must be taken into account when designing valves for liquids.

general specifications			**options**
ports	PCD-3	without valve body	with valve body thread G 3/8
function		NC	NO
pressure range	bar	0-150 (0-200 see pressure diagram)	NO (see pressure diagram)
Kv value	m³/h	3.0	
vacuum	leak rate		< 10^{-6} mbar•l•s^{-1}
pressure-vacuum	$P_1 \Leftrightarrow P_2$		upon request
back pressure	$P_2 > P_1$		upon request
media		gaseous - liquid - highly viscous - gelatinous - pasty	
abrasive media			
damping	opening		
	closing	by throttles on pilot valve	
flow direction	A ⇨ B	as marked	bi-directional upon request
switching cycles	1/min	700	
switching time	ms	opening 30-3000	
		closing 30-3000	
media temperature	°C	direct mounted pilot valve 60	remote mounted pilot valve outside
ambient temperature	°C	direct mounted pilot valve 50	temperatur range of media max. 150 °C
flush ports			
leak ports			available
limit switches			inductive
manual override		via pilot valve	
approvals			WAZ
mounting			mounting holes on valve body 2 x M6
weight	kg	PCD-3 1.3	PCD-3 1.9
additional equipment			valve body

electrical specifications			**options**
nominal voltage	U_n	DC 24 V	special voltage upon request
	U_n	AC 230 V 50 Hz	special voltage upon request
power consumption	DC	4.8 W	2.5 W (actuation pressure range 4-7 bar)
	AC	pick up 11.0 VA holding 8.5 VA	
protection	IP65 (P54)	acc. DIN 40050	
energized duty rating	ED	100%	
connection		plug acc. DIN EN 175301-803 form B, 2 positions x180° / wire diameter 6-8 mm	
optional	M12x1	connector acc. DESINA	connector acc. VDMA
additional equipment		illuminated plug with varistor	
max. temperature	media	60°C	
	ambient	50°C	
explosion proof	E Ex e II T5	nominal voltage U_n	DC 24 V 3.25 W
		power consumption	AC 230 V 50 Hz 2.90 W

pneumatic specifications			**options**
actuation pressure range	bar	4-8	
air consumption	cm³/stroke	PCD-3 27	
cycle speed		main valve speed variable by throttleson pilot valve	
control		preferably 5/2 way pilot valve	
pilot valve interface			
actuator ports	2/4	G 1/8	

hydraulic specifications			**options**
actuation pressure range	bar	10-30	> 30 bar upon request
control		preferably 4/2 way control valve	
actuator ports	X/Y	G 1/4 via adapter	NPT 1/4 via adapter
by media			

■ specifications not highlighted are standard
specifications highlighted in grey are optional

müller co-ax gmbh • Friedrich-Müller-Str. 1 • 74670 Forchtenberg • Germany • fon +49(0)7947/828-0 • fax +49(0)7947/828-11 • Email info@co-ax.com

coax® data sheet - lateral valve

type PCD-3 10

function: **NC**
closed when not energized

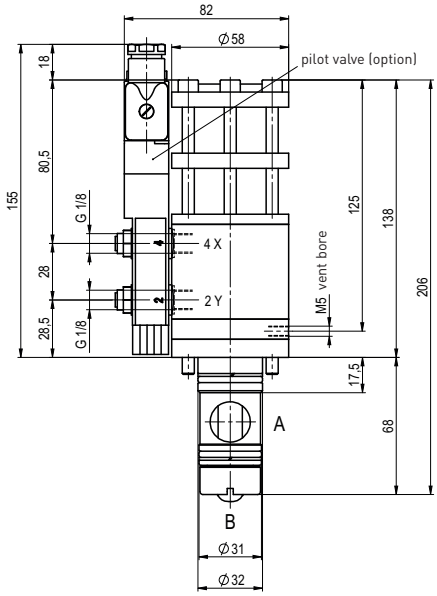

function: **NO**
open when not energized

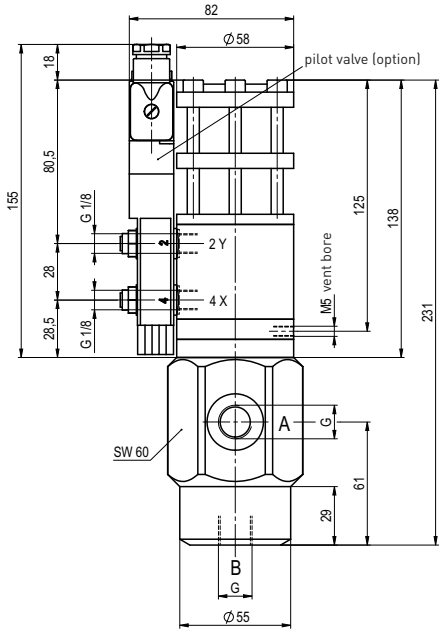

drilling design for cartridge

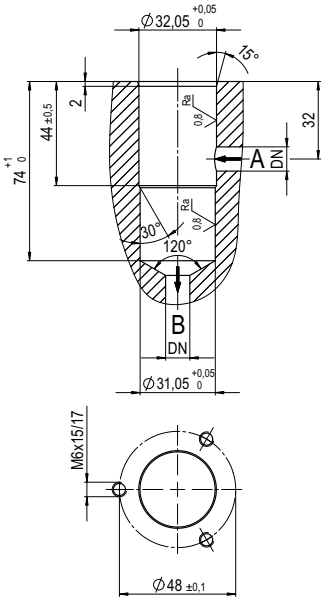

pressure-diagram

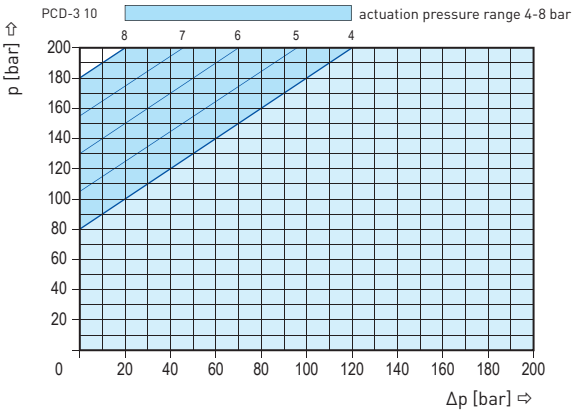

pneumatic specifications

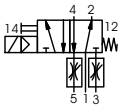

5/2 way pilot valve
flow rate 350 l/min
pressure range 3-10 bar G 1/8

müller co-ax shall retain the rights to these documents. Modifications to the documents are strictly prohibited.
Rights reserved to make technical alterations • Not responsible for printing errors • Detailled drawings can be obtained upon request

coax® data sheet - lateral valve

type PCD-3 15

09/2022

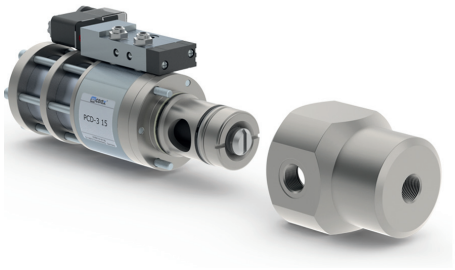

2/2-way valve	**externally controlled**	
pressure range	PN 0-200 bar	
orifice	DN 15 mm	
connection	thread/cartridge	
function	valve normally closed symbol **NC**	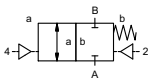
	valve normally open symbol **NO**	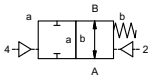
operating principle	externally controlled with spring return	
body material	⓪ aluminium	③
	① brass	④
	②	⑥ stainless steel
valve seat	synthetic materials on metal	metal on metal
seal materials	PU, NBR	PTFE, PE, FPM, EPDM

⚠ Above stated body materials refer to the valve port connections that get in contact with the media only!

details needed for main valve
- orifice
- port
- function NC/NO
- operating pressure/Δp
- flow rate
- media
- media temperature
- ambient temperature
- type of actuation

details needed for pneumatic actuation
- nominal voltage
- type of protection
- actuation pressure range min/max
- pilot valve type

details needed for hydraulic actuation
- actuation pressure range min/max
- hydraulic control valve function

⚠ The valves' technical design is based on media and application requirements. This can lead to deviations from the general specifications shown on the data sheet with regards to the design, sealing materials and characteristics.

⚠ If order or application specifications are incomplete or imprecise there exists a risk of an incorrect technical design of the valve for the required application. As a consequence, the physical and / or chemical properties of the materials or seals used, may not be suitable for the intended application. To avoid hydraulic shocks in pipelines, the flow velocities must be taken into account when designing valves for liquids.

general specifications			**options**
ports	PCD-3	without valve body	with valve body thread G 1/2 - G 3/4
function		NC	NO
pressure range	bar	0-150 (0-200 see pressure diagram)	NO (see pressure diagram)
Kv value	m³/h	6.0	
vacuum	leak rate		< 10^{-6} mbar•l•s^{-1}
pressure-vacuum	$P_1 \Leftrightarrow P_2$		upon request
back pressure	$P_2 > P_1$		upon request
media		gaseous - liquid - highly viscous - gelatinous - pasty	
abrasive media			
damping	opening		
	closing	by throttles on pilot valve	
flow direction	A ⇨ B	as marked	bi-directional upon request
switching cycles	1/min	300	
switching time	ms	opening 100-3000	
		closing 100-3000	
media temperature	°C	direct mounted pilot valve 60	remote mounted pilot valve outside
ambient temperature	°C	direct mounted pilot valve 50	temperatur range of media max. 150 °C
flush ports			
leak ports			available
limit switches			inductive
manual override		via pilot valve	
approvals			WAZ
mounting			mounting holes on valve body 2 x M8
weight	kg	PCD-3 2.4	PCD-3 3.5
additional equipment			valve body

electrical specifications			**options**
nominal voltage	U_n	DC 24 V	special voltage upon request
	U_n	AC 230 V 50 Hz	special voltage upon request
power consumption	DC	4.8 W	2.5 W (actuation pressure range 4-7 bar)
	AC	pick up 11.0 VA holding 8.5 VA	
protection	IP65 (P54)	acc. DIN 40050	
energized duty rating	ED	100%	
connection		plug acc. DIN EN 175301-803 form B, 2 positions x180° / wire diameter 6-8 mm	
optional	M12x1	connector acc. DESINA	connector acc. VDMA
additional equipment		illuminated plug with varistor	
max. temperature	media	60°C	
	ambient	50°C	
explosion proof	E Ex e II T5	nominal voltage U_n	DC 24 V 3.25 W
		power consumption	AC 230 V 50 Hz 2.90 W

pneumatic specifications			**options**
actuation pressure range	bar	4-8	
air consumption	cm³/stroke	PCD-3 58	
cycle speed		main valve speed variable by throttleson pilot valve	
control		preferably 5/2 way pilot valve	
pilot valve interface			
actuator ports	2/4	G 1/8	

hydraulic specifications			**options**
actuation pressure range	bar	10-30	> 30 bar upon request
control		preferably 4/2 way control valve	
actuator ports	X/Y	G 1/4 via adapter	NPT 1/4 via adapter
by media			

■ specifications not highlighted are standard
specifications highlighted in grey are optional

müller co-ax gmbh • Friedrich-Müller-Str. 1 • 74670 Forchtenberg • Germany • fon +49(0)7947/828-0 • fax +49(0)7947/828-11 • Email info@co-ax.com

coax® data sheet - lateral valve

type PCD-3 15

function: **NC**
closed when not energized

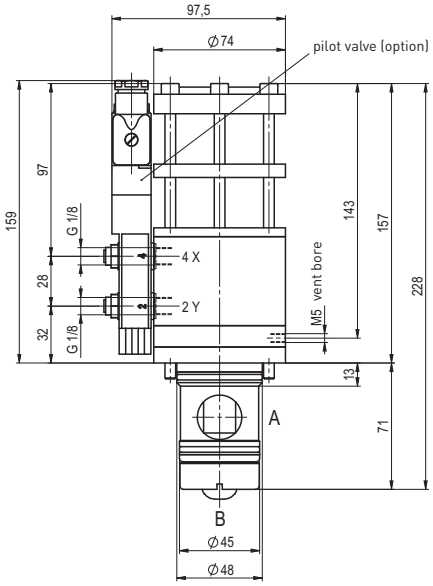

function: **NO**
open when not energized

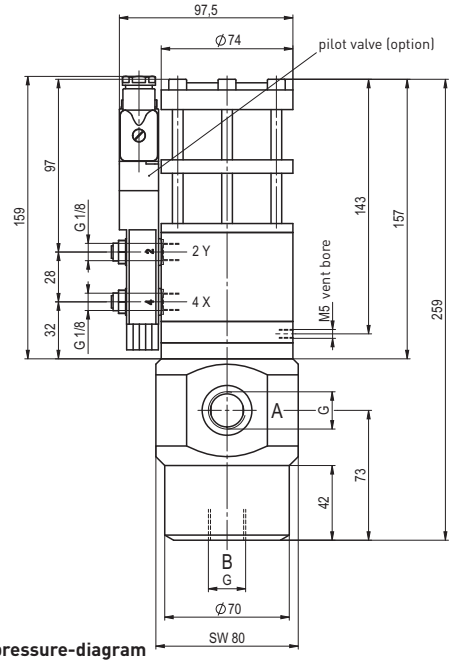

drilling design for cartridge

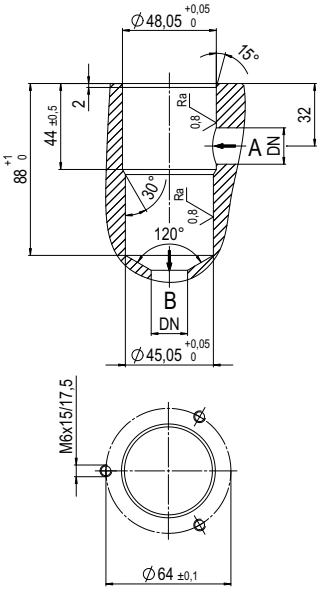

pressure-diagram

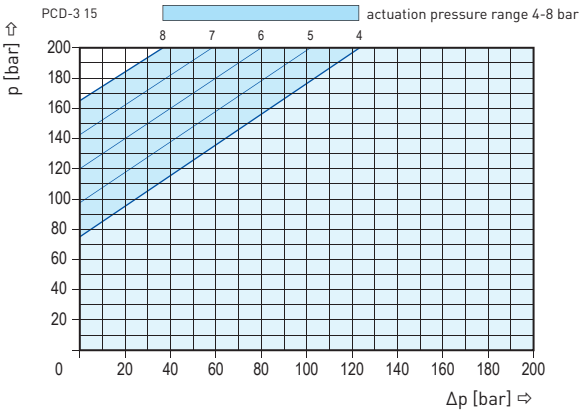

pneumatic specifications

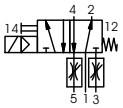

5/2 way pilot valve
flow rate 350 l/min
pressure range 3-10 bar G 1/8

müller co-ax shall retain the rights to these documents. Modifications to the documents are strictly prohibited.
Rights reserved to make technical alterations • Not responsible for printing errors • Detailled drawings can be obtained upon request

coax® data sheet - lateral valve

type PCD-1 15
PCD-2 15

09/2022

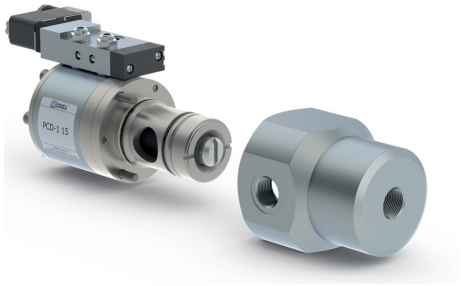

⚠ Above stated body materials refer to the valve port connections that get in contact with the media only!

details needed for main valve
- orifice
- port
- function NC/NO
- operating pressure/Δp
- flow rate
- media
- media temperature
- ambient temperature
- type of actuation

details needed for pneumatic actuation
- nominal voltage
- type of protection
- actuation pressure range min/max
- pilot valve type

details needed for hydraulic actuation
- actuation pressure range min/max
- hydraulic control valve function

⚠ The valves' technical design is based on media and application requirements. This can lead to deviations from the general specifications shown on the data sheet with regards to the design, sealing materials and characteristics.

⚠ If order or application specifications are incomplete or imprecise there exists a risk of an incorrect technical design of the valve for the required application. As a consequence, the physical and / or chemical properties of the materials or seals used, may not be suitable for the intended application. To avoid hydraulic shocks in pipelines, the flow velocities must be taken into account when designing valves for liquids.

■ specifications not highlighted are standard
specifications highlighted in grey are optional

2/2-way valve	**externally controlled**	
pressure range	PN 0-200 bar	
orifice	DN 15 mm	
connection	thread/cartridge	
function	valve normally closed symbol **NC**	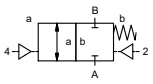
	valve normally open symbol **NO**	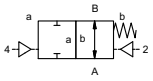
operating principle	externally controlled with spring return	
body material	⓪ aluminium ① brass ②	③ ④ ⑥ stainless steel
valve seat	synthetic materials on metal	metal on metal
seal materials	PU, NBR	PTFE, PE, FPM, EPDM

general specifications			**options**
ports	PCD-1	without valve body	with valve body thread G 1/2 - G 3/4
	PCD-2	without valve body	with valve body thread G 1/2 - G 3/4
function		NC	NO
pressure range	PCD-1	0-50 (0-200 see pressure diagram)	NO (see pressure diagram)
	PCD-2	0-100 (0-200 see pressure diagram)	
Kv value	m^3/h	6.0	
vacuum	leak rate		< 10^{-6} mbar•l•s^{-1}
pressure-vacuum	$P_1 \Leftrightarrow P_2$		upon request
back pressure	$P_2 > P_1$		upon request
media		gaseous - liquid - highly viscous - gelatinous - pasty	
abrasive media			
damping	opening		
	closing	by throttles on pilot valve	
flow direction	A ⇨ B	as marked	bi-directional upon request
switching cycles	1/min	300	
switching time	ms	opening 100-3000	
		closing 100-3000	
media temperature	°C	direct mounted pilot valve 60	remote mounted pilot valve outside
ambient temperature	°C	direct mounted pilot valve 50	temperatur range of media max. 150 °C
flush ports			
leak ports			available
limit switches			inductive
manual override		via pilot valve	
approvals			WAZ
mounting			mounting holes on valve body 2 x M8
weight	kg	PCD-1 1.8 PCD-2 2.1	PCD-1 2.9 PCD-2 3.2
additional equipment			valve body

electrical specifications			**options**
nominal voltage	U_n	DC 24 V	special voltage upon request
	U_n	AC 230 V 50 Hz	special voltage upon request
power consumption	DC	4.8 W	2.5 W (actuation pressure range 4-7 bar)
	AC	pick up 11.0 VA holding 8.5 VA	
protection	IP65 (P54)	acc. DIN 40050	
energized duty rating	ED	100%	
connection		plug acc. DIN EN 175301-803 form B, 2 positions x180° / wire diameter 6-8 mm	
optional	M12x1	connector acc. DESINA	connector acc. VDMA
additional equipment		illuminated plug with varistor	
max. temperature	media	60°C	
	ambient	50°C	
explosion proof	E Ex e II T5	nominal voltage U_n	DC 24 V 3.25 W
		power consumption	AC 230 V 50 Hz 2.90 W

pneumatic specifications			**options**
actuation pressure range	bar	4-8	
air consumption	cm^3/stroke	PCD-1 14 PCD-2 36	
cycle speed		main valve speed variable by throttleson pilot valve	
control		preferably 5/2 way pilot valve	
pilot valve interface			
actuator ports	2/4	G 1/8	

hydraulic specifications			**options**
actuation pressure range	bar	10-30	> 30 bar upon request
control		preferably 4/2 way control valve	
actuator ports	X/Y	G 1/4 via adapter	NPT 1/4 via adapter
by media			

müller co-ax gmbh • Friedrich-Müller-Str. 1 • 74670 Forchtenberg • Germany • fon +49(0)7947/828-0 • fax +49(0)7947/828-11 • Email info@co-ax.com

coax® data sheet - lateral valve

type PCD-1 15
PCD-2 15

function: **NC**
closed when not energized

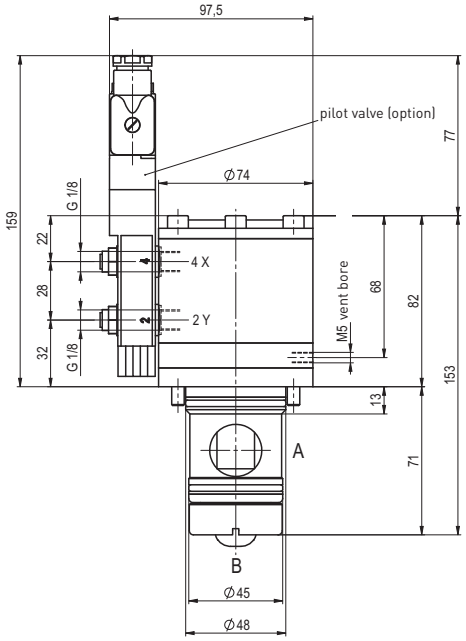

function: **NO**
open when not energized

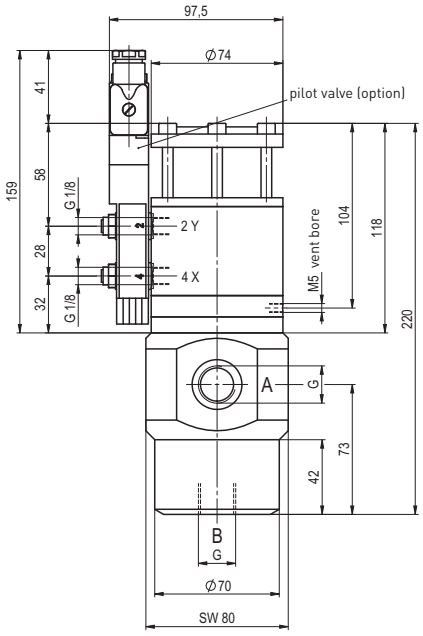

drilling design for cartridge

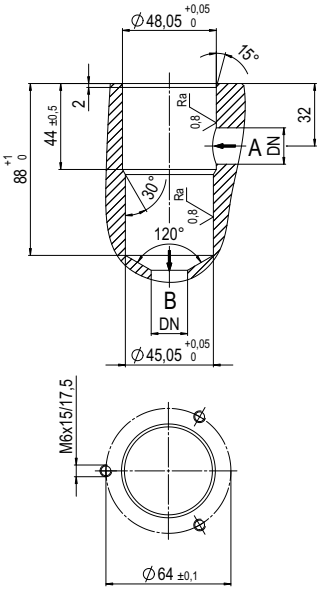

pneumatic specifications

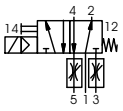

5/2 way pilot valve
flow rate 350 l/min
pressure range 3-10 bar G 1/8

pressure-diagram

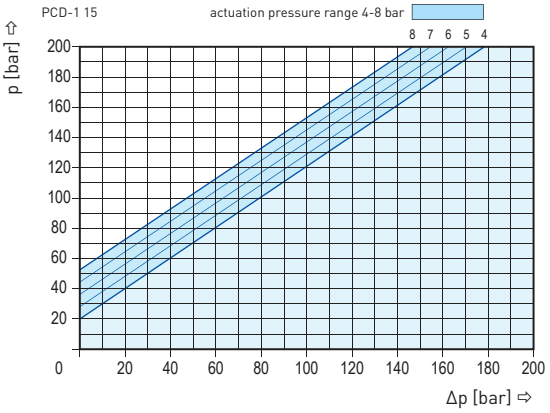

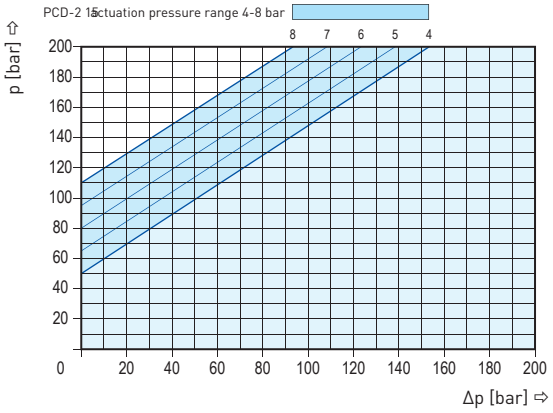

müller co-ax shall retain the rights to these documents. Modifications to the documents are strictly prohibited.
Rights reserved to make technical alterations • Not responsible for printing errors • Detailled drawings can be obtained upon request

coax® data sheet - lateral valve

type PCS-1 10
PCS-2 10

09/2022

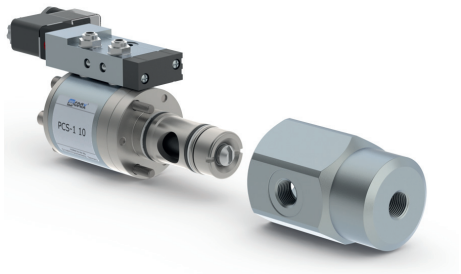

⚠ Above stated body materials refer to the valve port connections that get in contact with the media only!

details needed for main valve
- orifice
- port
- function NC/NO
- operating pressure/Δp
- flow rate
- media
- media temperature
- ambient temperature
- type of actuation

details needed for pneumatic actuation
- nominal voltage
- type of protection
- actuation pressure range min/max
- pilot valve type

details needed for hydraulic actuation
- actuation pressure range min/max
- hydraulic control valve function

⚠ The valves' technical design is based on media and application requirements. This can lead to deviations from the general specifications shown on the data sheet with regards to the design, sealing materials and characteristics.

⚠ If order or application specifications are incomplete or imprecise there exists a risk of an incorrect technical design of the valve for the required application. As a consequence, the physical and / or chemical properties of the materials or seals used, may not be suitable for the intended application. To avoid hydraulic shocks in pipelines, the flow velocities must be taken into account when designing valves for liquids.

■ specifications not highlighted are standard
specifications highlighted in grey are optional

2/2-way valve	**externally controlled**	
pressure range	PN 0-200 bar	
orifice	DN 10 mm	
connection	thread/cartridge	
function	valve normally closed symbol **NC**	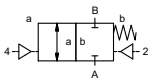
	valve normally open symbol **NO**	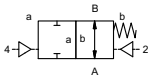
operating principle	externally controlled with spring return	
body material	⓪ aluminium	③
	①	④
	②	⑥ stainless steel
valve seat	synthetic materials on metal	metal on metal
seal materials	HNBR	FPM, EPDM

general specifications			**options**
ports	PCS-1	without valve body	with valve body thread G 3/8
	PCS-2	without valve body	with valve body thread G 3/8
function		NC	NO
pressure range	PCS-1	0-50 (0-200 see pressure diagram)	NO (see pressure diagram)
	PCS-2	0-100 (0-200 see pressure diagram)	
Kv value	m^3/h	3.0	
vacuum	leak rate		
pressure-vacuum	$P_1 \Leftrightarrow P_2$		
back pressure	$P_2 > P_1$		upon request
media		gaseous - liquid - highly viscous - gelatinous - pasty - contaminated	
abrasive media			available
damping	opening		
	closing	by throttles on pilot valve	
flow direction	A ⇨ B	as marked	bi-directional upon request
switching cycles	1/min	700	
switching time	ms	opening 30-3000	
		closing 30-3000	
media temperature	°C	direct mounted pilot valve 60	remote mounted pilot valve outside
ambient temperature	°C	direct mounted pilot valve 50	temperatur range of media max. 150 °C
flush ports			
leak ports			available
limit switches			inductive
manual override		via pilot valve	
approvals			WAZ
mounting			mounting holes on valve body 2 x M6
weight	kg	PCS-1 1.1 PCS-2 1.2	PCS-1 1.7 PCS-2 1.8
additional equipment			valve body

electrical specifications			**options**
nominal voltage	U_n	DC 24 V	special voltage upon request
	U_n	AC 230 V 50 Hz	special voltage upon request
power consumption	DC	4.8 W	2.5 W (actuation pressure range 4-7 bar)
	AC	pick up 11.0 VA holding 8.5 VA	
protection	IP65 (P54)	acc. DIN 40050	
energized duty rating	ED	100%	
connection		plug acc. DIN EN 175301-803 form B, 2 positions x180° / wire diameter 6-8 mm	
optional	M12x1	connector acc. DESINA	connector acc. VDMA
additional equipment		illuminated plug with varistor	
max. temperature	media	60°C	
	ambient	50°C	
explosion proof	E Ex e II T5	nominal voltage U_n	DC 24 V 3.25 W
		power consumption	AC 230 V 50 Hz 2.90 W

pneumatic specifications			**options**
actuation pressure range	bar	4-8	
air consumption	cm^3/stroke	PCS-1 7 PCS-2 17	
cycle speed		main valve speed variable by throttleson pilot valve	
control		preferably 5/2 way pilot valve	
pilot valve interface			
actuator ports	2/4	G 1/8	

hydraulic specifications			**options**
actuation pressure range	bar	10-30	> 30 bar upon request
control		preferably 4/2 way control valve	
actuator ports	X/Y	G 1/4 via adapter	NPT 1/4 via adapter
by media			

müller co-ax gmbh • Friedrich-Müller-Str. 1 • 74670 Forchtenberg • Germany • fon +49(0)7947/828-0 • fax +49(0)7947/828-11 • Email info@co-ax.com

coax® data sheet - lateral valve

type PCS-1 10
PCS-2 10

function: **NC**
closed when not energized

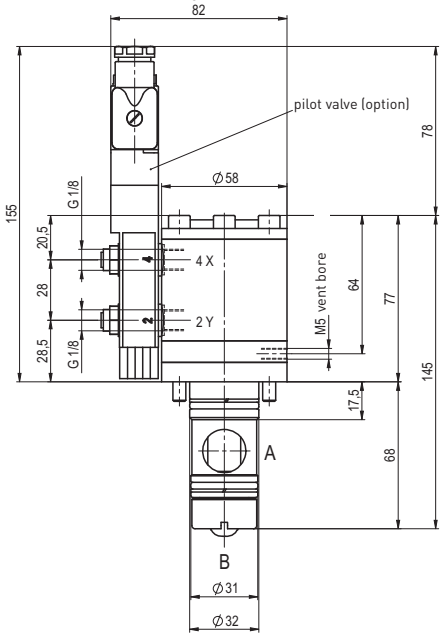

function: **NO**
open when not energized

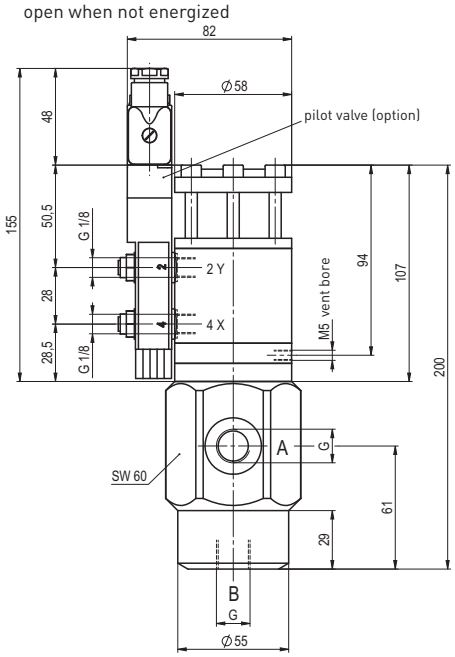

drilling design for cartridge

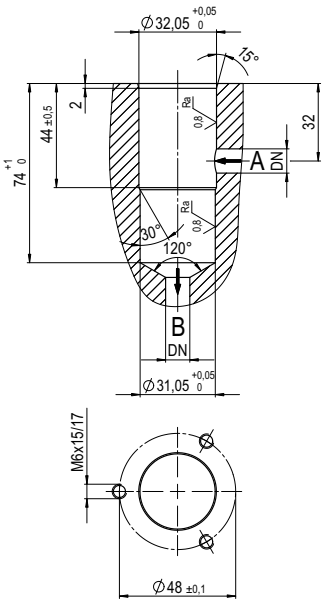

pneumatic specifications

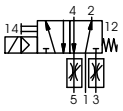

5/2 way pilot valve
flow rate 350 l/min
pressure range 3-10 bar G 1/8

pressure-diagram

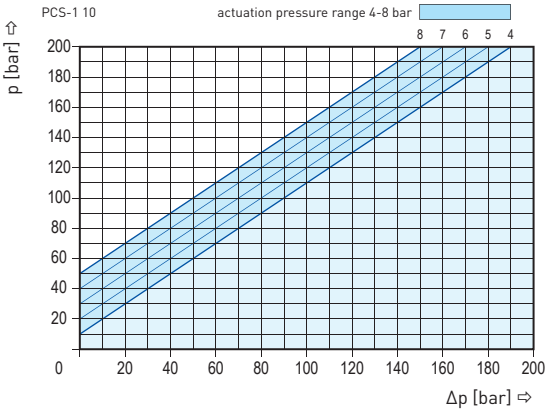

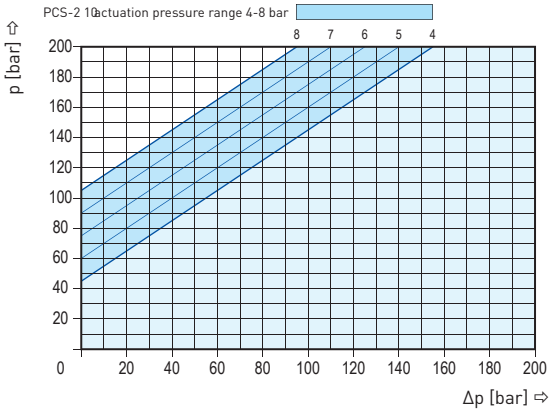

müller co-ax shall retain the rights to these documents. Modifications to the documents are strictly prohibited.
Rights reserved to make technical alterations • Not responsible for printing errors • Detailled drawings can be obtained upon request

coax® data sheet - lateral valve

type PCS-3 10

09/2022

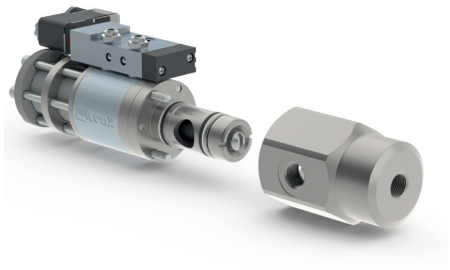

2/2-way valve	**externally controlled**	
pressure range	PN 0-200 bar	
orifice	DN 10 mm	
connection	thread/cartridge	
function	valve normally closed symbol **NC**	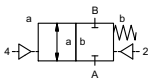
	valve normally open symbol **NO**	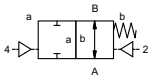
operating principle	externally controlled with spring return	
body material	⓪ aluminium	③
	①	④
	②	⑥ stainless steel
valve seat	synthetic materials on metal	metal on metal
seal materials	HNBR	FPM, EPDM

⚠ Above stated body materials refer to the valve port connections that get in contact with the media only!

details needed for main valve

- orifice
- port
- function NC/NO
- operating pressure/Δp
- flow rate
- media
- media temperature
- ambient temperature
- type of actuation

details needed for pneumatic actuation

- nominal voltage
- type of protection
- actuation pressure range min/max
- pilot valve type

details needed for hydraulic actuation

- actuation pressure range min/max
- hydraulic control valve function

⚠ The valves' technical design is based on media and application requirements. This can lead to deviations from the general specifications shown on the data sheet with regards to the design, sealing materials and characteristics.

⚠ If order or application specifications are incomplete or imprecise there exists a risk of an incorrect technical design of the valve for the required application. As a consequence, the physical and / or chemical properties of the materials or seals used, may not be suitable for the intended application. To avoid hydraulic shocks in pipelines, the flow velocities must be taken into account when designing valves for liquids.

general specifications			**options**
ports	PCS-3	without valve body	with valve body thread G 3/8
function		NC	NO
pressure range	bar	0-150 (0-200 see pressure diagram)	NO (see pressure diagram)
Kv value	m³/h	3.0	
vacuum	leak rate		
pressure-vacuum	$P_1 \Leftrightarrow P_2$		
back pressure	$P_2 > P_1$		upon request
media		gaseous - liquid - highly viscous - gelatinous - pasty - contaminated	
abrasive media			available
damping	opening		
	closing	by throttles on pilot valve	
flow direction	A ⇨ B	as marked	bi-directional upon request
switching cycles	1/min	700	
switching time	ms	opening 30-3000	
		closing 30-3000	
media temperature	°C	direct mounted pilot valve 60	remote mounted pilot valve outside
ambient temperature	°C	direct mounted pilot valve 50	temperatur range of media max. 150 °C
flush ports			
leak ports			available
limit switches			inductive
manual override		via pilot valve	
approvals			WAZ
mounting			mounting holes on valve body 2 x M6
weight	kg	PCS-3 1.3	PCS-3 1.9
additional equipment			valve body

electrical specifications			**options**
nominal voltage	U_n	DC 24 V	special voltage upon request
	U_n	AC 230 V 50 Hz	special voltage upon request
power consumption	DC	4.8 W	2.5 W (actuation pressure range 4-7 bar)
	AC	pick up 11.0 VA holding 8.5 VA	
protection	IP65 (P54)	acc. DIN 40050	
energized duty rating	ED	100%	
connection		plug acc. DIN EN 175301-803 form B, 2 positions x180° / wire diameter 6-8 mm	
optional	M12x1	connector acc. DESINA	connector acc. VDMA
additional equipment		illuminated plug with varistor	
max. temperature	media	60°C	
	ambient	50°C	
explosion proof	E Ex e II T5	nominal voltage U_n	DC 24 V 3.25 W
		power consumption	AC 230 V 50 Hz 2.90 W

pneumatic specifications			**options**
actuation pressure range	bar	4-8	
air consumption	cm³/stroke	PCS-3 27	
cycle speed		main valve speed variable by throttleson pilot valve	
control		preferably 5/2 way pilot valve	
pilot valve interface			
actuator ports	2/4	G 1/8	

hydraulic specifications			**options**
actuation pressure range	bar	10-30	> 30 bar upon request
control		preferably 4/2 way control valve	
actuator ports	X/Y	G 1/4 via adapter	NPT 1/4 via adapter
by media			

■ specifications not highlighted are standard
specifications highlighted in grey are optional

müller co-ax gmbh • Friedrich-Müller-Str. 1 • 74670 Forchtenberg • Germany • fon +49(0)7947/828-0 • fax +49(0)7947/828-11 • Email info@co-ax.com

coax® data sheet - lateral valve

type PCS-3 10

function: **NC**
closed when not energized

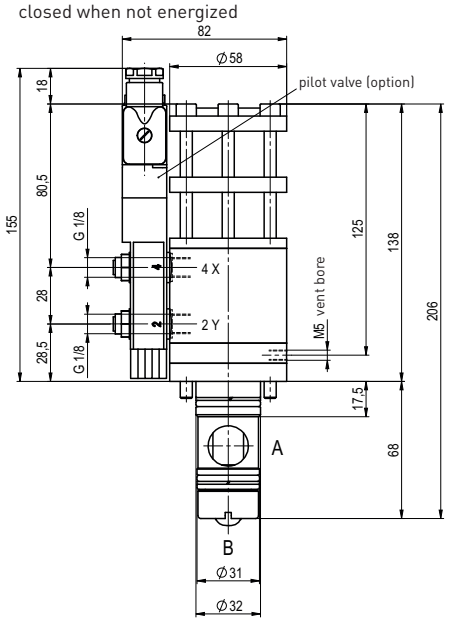

function: **NO**
open when not energized

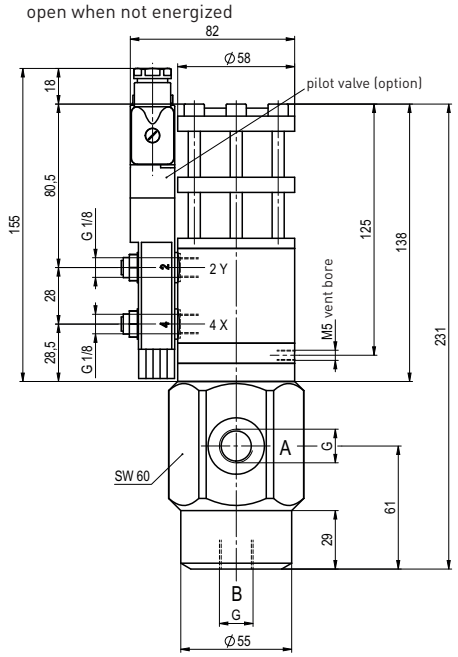

drilling design for cartridge

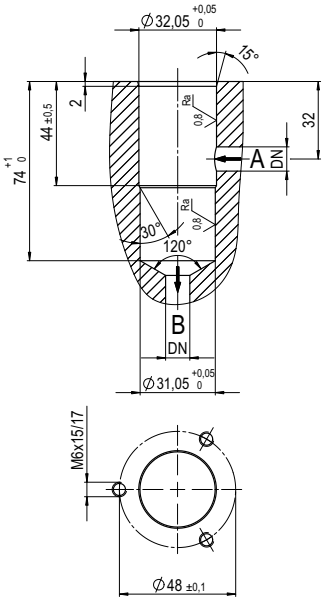

pressure-diagram

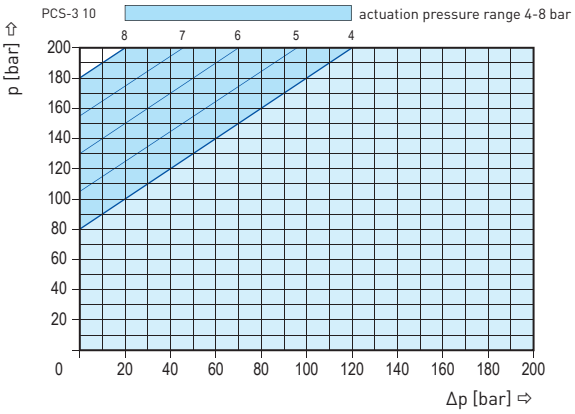

pneumatic specifications

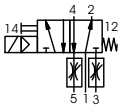

5/2 way pilot valve
flow rate 350 l/min
pressure range 3-10 bar G 1/8

müller co-ax shall retain the rights to these documents. Modifications to the documents are strictly prohibited.
Rights reserved to make technical alterations • Not responsible for printing errors • Detailled drawings can be obtained upon request

coax® data sheet - lateral valve

type PCS-3 15

09/2022

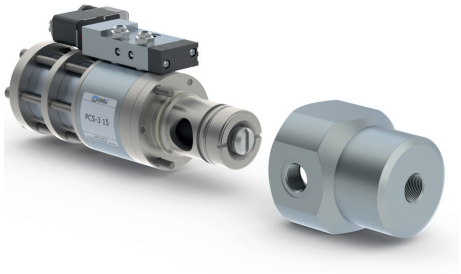

2/2-way valve	**externally controlled**
pressure range	PN 0-200 bar
orifice	DN 15 mm
connection	thread/cartridge
function	valve normally closed symbol **NC**

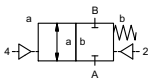

valve
normally open
symbol **NO**

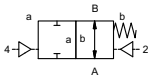

operating principle	externally controlled with spring return	
body material	⓪ aluminium	③
	① brass	④
	②	⑥ stainless steel
valve seat	synthetic materials on metal	metal on metal
seal materials	HNBR	FPM, EPDM

⚠ Above stated body materials refer to the valve port connections that get in contact with the media only!

details needed for main valve

- orifice
- port
- function NC/NO
- operating pressure/Δp
- flow rate
- media
- media temperature
- ambient temperature
- type of actuation

details needed for pneumatic actuation

- nominal voltage
- type of protection
- actuation pressure range min/max
- pilot valve type

details needed for hydraulic actuation

- actuation pressure range min/max
- hydraulic control valve function

⚠ The valves' technical design is based on media and application requirements. This can lead to deviations from the general specifications shown on the data sheet with regards to the design, sealing materials and characteristics.

⚠ If order or application specifications are incomplete or imprecise there exists a risk of an incorrect technical design of the valve for the required application. As a consequence, the physical and / or chemical properties of the materials or seals used, may not be suitable for the intended application. To avoid hydraulic shocks in pipelines, the flow velocities must be taken into account when designing valves for liquids.

general specifications			**options**
ports	PCS-3	without valve body	with valve body thread G 1/2 - G 3/4
function		NC	NO
pressure range	bar	0-150 (0-200 see pressure diagram)	NO (see pressure diagram)
Kv value	m³/h	6.0	
vacuum	leak rate		
pressure-vacuum	$P_1 \Leftrightarrow P_2$		
back pressure	$P_2 > P_1$		upon request
media		gaseous - liquid - highly viscous - gelatinous - pasty - contaminated	
abrasive media			available
damping	opening		
	closing	by throttles on pilot valve	
flow direction	A ⇨ B	as marked	bi-directional upon request
switching cycles	1/min	300	
switching time	ms	opening 100-3000	
		closing 100-3000	
media temperature	°C	direct mounted pilot valve 60	remote mounted pilot valve outside
ambient temperature	°C	direct mounted pilot valve 50	temperatur range of media max. 150 °C
flush ports			
leak ports			available
limit switches			inductive
manual override		via pilot valve	
approvals			WAZ
mounting			mounting holes on valve body 2 x M8
weight	kg	PCS-3 2.4	PCS-3 3.5
additional equipment			valve body

electrical specifications			**options**
nominal voltage	U_n	DC 24 V	special voltage upon request
	U_n	AC 230 V 50 Hz	special voltage upon request
power consumption	DC	4.8 W	2.5 W (actuation pressure range 4-7 bar)
	AC	pick up 11.0 VA holding 8.5 VA	
protection	IP65 (P54)	acc. DIN 40050	
energized duty rating	ED	100%	
connection		plug acc. DIN EN 175301-803 form B, 2 positions x180° / wire diameter 6-8 mm	
optional	M12x1	connector acc. DESINA	connector acc. VDMA
additional equipment		illuminated plug with varistor	
max. temperature	media	60°C	
	ambient	50°C	
explosion proof	E Ex e II T5	nominal voltage U_n	DC 24 V 3.25 W
		power consumption	AC 230 V 50 Hz 2.90 W

pneumatic specifications			**options**
actuation pressure range	bar	4-8	
air consumption	cm³/stroke	PCS-3 58	
cycle speed		main valve speed variable by throttleson pilot valve	
control		preferably 5/2 way pilot valve	
pilot valve interface			
actuator ports	2/4	G 1/8	

hydraulic specifications			**options**
actuation pressure range	bar	10-30	> 30 bar upon request
control		preferably 4/2 way control valve	
actuator ports	X/Y	G 1/4 via adapter	NPT 1/4 via adapter
by media			

■ specifications not highlighted are standard
specifications highlighted in grey are optional

müller co-ax gmbh • Friedrich-Müller-Str. 1 • 74670 Forchtenberg • Germany • fon +49(0)7947/828-0 • fax +49(0)7947/828-11 • Email info@co-ax.com

coax® data sheet - lateral valve

type PCS-3 15

drilling design for cartridge

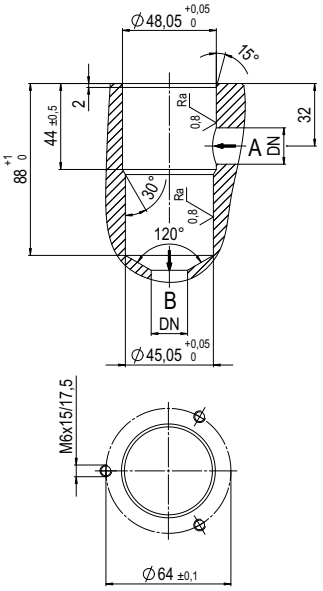

function: **NC**
closed when not energized

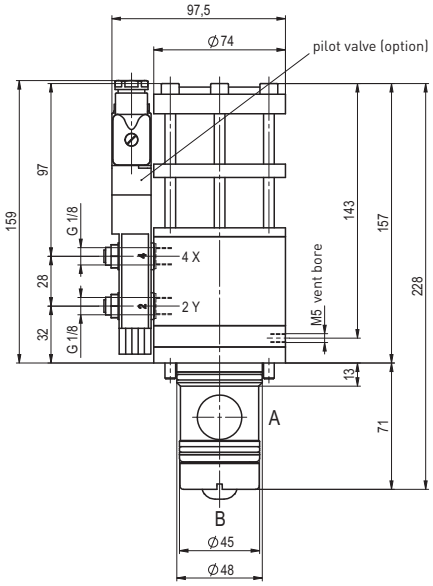

function: **NO**
open when not energized

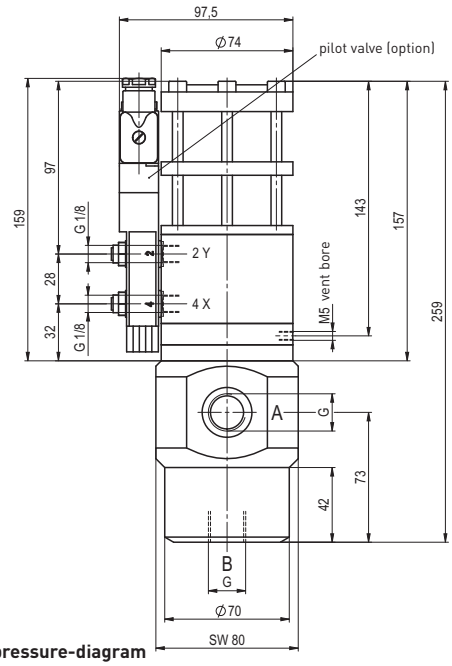

pressure-diagram

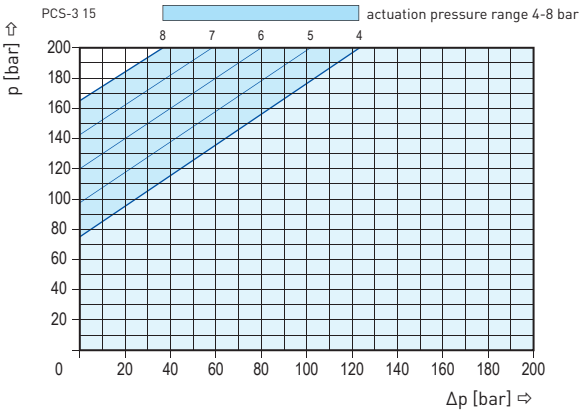

pneumatic specifications

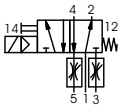

5/2 way pilot valve
flow rate 350 l/min
pressure range 3-10 bar G 1/8

müller co-ax shall retain the rights to these documents. Modifications to the documents are strictly prohibited.
Rights reserved to make technical alterations • Not responsible for printing errors • Detailled drawings can be obtained upon request

coax® data sheet - lateral valve

type PCS-1 15
PCS-2 15

09/2022

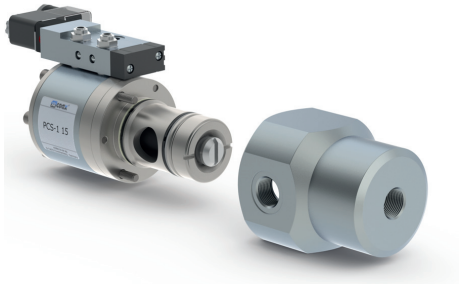

⚠ Above stated body materials refer to the valve port connections that get in contact with the media only!

details needed for main valve
- orifice
- port
- function NC/NO
- operating pressure/Δp
- flow rate
- media
- media temperature
- ambient temperature
- type of actuation

details needed for pneumatic actuation
- nominal voltage
- type of protection
- actuation pressure range min/max
- pilot valve type

details needed for hydraulic actuation
- actuation pressure range min/max
- hydraulic control valve function

⚠ The valves' technical design is based on media and application requirements. This can lead to deviations from the general specifications shown on the data sheet with regards to the design, sealing materials and characteristics.

⚠ If order or application specifications are incomplete or imprecise there exists a risk of an incorrect technical design of the valve for the required application. As a consequence, the physical and / or chemical properties of the materials or seals used, may not be suitable for the intended application. To avoid hydraulic shocks in pipelines, the flow velocities must be taken into account when designing valves for liquids.

■ specifications not highlighted are standard
specifications highlighted in grey are optional

2/2-way valve	**externally controlled**	
pressure range	PN 0-200 bar	
orifice	DN 15 mm	
connection	thread/cartridge	
function	valve normally closed symbol **NC**	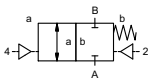
	valve normally open symbol **NO**	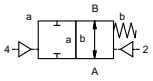
operating principle	externally controlled with spring return	
body material	⓪ aluminium ① brass ②	③ ④ ⑥ stainless steel
valve seat	synthetic materials on metal	metal on metal
seal materials	HNBR	FPM, EPDM

	general specifications		**options**
ports	PCS-1	without valve body	with valve body thread G 1/2 - G 3/4
	PCS-2	without valve body	with valve body thread G 1/2 - G 3/4
function		NC	NO
pressure range	PCS-1	0-50 (0-200 see pressure diagram)	NO (see pressure diagram)
	PCS-2	0-100 (0-200 see pressure diagram)	
Kv value	m^3/h	6.0	
vacuum	leak rate		
pressure-vacuum	$P_1 \Leftrightarrow P_2$		
back pressure	$P_2 > P_1$		upon request
media		gaseous - liquid - highly viscous - gelatinous - pasty - contaminated	
abrasive media			available
damping	opening		
	closing	by throttles on pilot valve	
flow direction	A ⇨ B	as marked	bi-directional upon request
switching cycles	1/min	300	
switching time	ms	opening 100-3000	
		closing 100-3000	
media temperature	°C	direct mounted pilot valve 60	remote mounted pilot valve outside
ambient temperature	°C	direct mounted pilot valve 50	temperatur range of media max. 150 °C
flush ports			
leak ports			available
limit switches			inductive
manual override		via pilot valve	
approvals			WAZ
mounting			mounting holes on valve body 2 x M8
weight	kg	PCS-1 1.8 PCS-2 2.1	PCS-1 2.9 PCS-2 3.2
additional equipment			valve body

	electrical specifications		**options**
nominal voltage	U_n	DC 24 V	special voltage upon request
	U_n	AC 230 V 50 Hz	special voltage upon request
power consumption	DC	4.8 W	2.5 W (actuation pressure range 4-7 bar)
	AC	pick up 11.0 VA holding 8.5 VA	
protection	IP65 (P54)	acc. DIN 40050	
energized duty rating	ED	100%	
connection		plug acc. DIN EN 175301-803 form B, 2 positions x180° / wire diameter 6-8 mm	
optional	M12x1	connector acc. DESINA	connector acc. VDMA
additional equipment		illuminated plug with varistor	
max. temperature	media	60°C	
	ambient	50°C	
explosion proof	E Ex e II T5	nominal voltage U_n	DC 24 V 3.25 W
		power consumption	AC 230 V 50 Hz 2.90 W

	pneumatic specifications		**options**
actuation pressure range	bar	4-8	
air consumption	cm^3/stroke	PCS-1 14 PCS-2 36	
cycle speed		main valve speed variable by throttleson pilot valve	
control		preferably 5/2 way pilot valve	
pilot valve interface			
actuator ports	2/4	G 1/8	

	hydraulic specifications		**options**
actuation pressure range	bar	10-30	> 30 bar upon request
control		preferably 4/2 way control valve	
actuator ports	X/Y	G 1/4 via adapter	NPT 1/4 via adapter
by media			

müller co-ax gmbh • Friedrich-Müller-Str. 1 • 74670 Forchtenberg • Germany • fon +49(0)7947/828-0 • fax +49(0)7947/828-11 • Email info@co-ax.com

coax® data sheet - lateral valve

type PCS-1 15
PCS-2 15

function: **NC**
closed when not energized

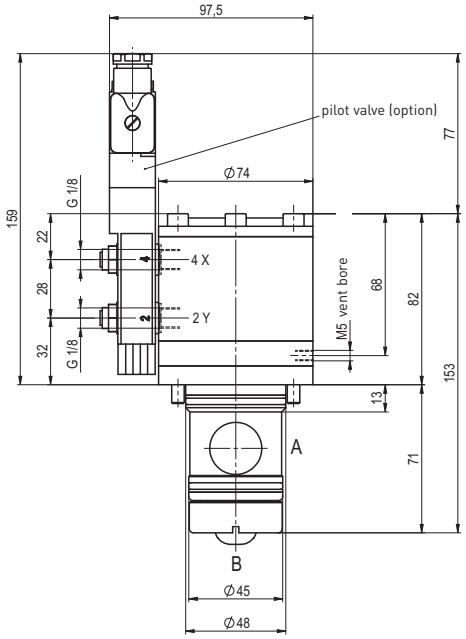

function: **NO**
open when not energized

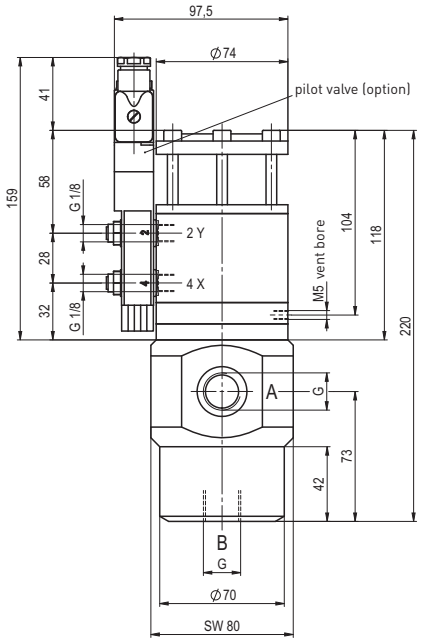

drilling design for cartridge

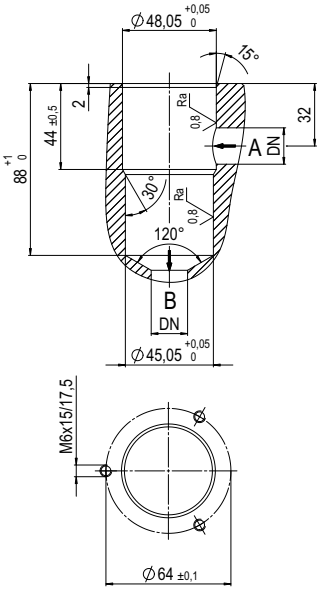

pneumatic specifications

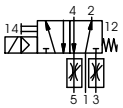

5/2 way pilot valve
flow rate 350 l/min
pressure range 3-10 bar G 1/8

pressure-diagram

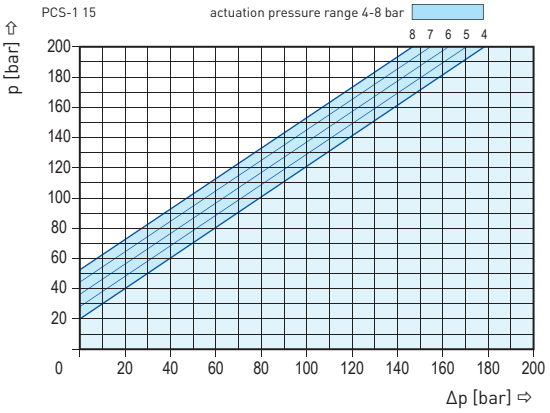

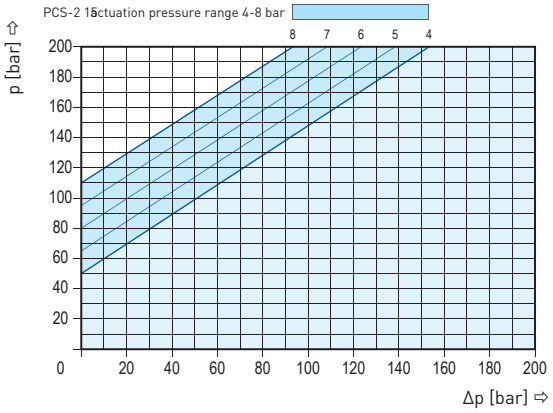

müller co-ax shall retain the rights to these documents. Modifications to the documents are strictly prohibited.
Rights reserved to make technical alterations • Not responsible for printing errors • Detailled drawings can be obtained upon request