coax® data sheet - coaxial valve

type MK 10

08/2022



⚠ Above stated body materials refer to the valve port connections that get in contact with the media only!

details needed

- orifice
- port
- function NC/NO
- operating pressure
- flow rate
- media
- media temperature
- ambient temperature
- nominal voltage

⚠ The valves' technical design is based on media and application requirements. This can lead to deviations from the general specifications shown on the data sheet with regards to the design, sealing materials and characteristics.

⚠ If order or application specifications are incomplete or imprecise there exists a risk of an incorrect technical design of the valve for the required application. As a consequence, the physical and / or chemical properties of the materials or seals used, may not be suitable for the intended application. To avoid hydraulic shocks in pipelines, the flow velocities must be taken into account when designing valves for liquids.

2/2-way valve	**direct acting**	
pressure range	PN 0-40 bar	
orifice	DN 10 mm	
connection	thread	
function	valve normally closed symbol **NC**	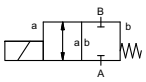
	valve normally open symbol **NO**	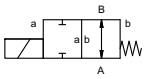
operating principle	pressure balanced, with spring return	
body material	① brass	②
	③ brass, nickel plated	⑤
	④	⑥ stainless steel
	⓪ aluminium	
valve seat	synthetic materials on metal	
seal materials	NBR	FPM, CR, EPDM

general specifications			**options**
ports	MK	threads G 1/4 - G 3/4	special threads
function		NC	NO
pressure range	bar	0-16 / 0-40	
Kv value	m^3/h	2.5	
vacuum	leak rate		< 10^{-6} mbar•l•s^{-1}
pressure-vacuum	$P_1 \Leftrightarrow P_2$		upon request
back pressure	$P_2 > P_1$		available (max. 16 bar)
media		gaseous - liquid - contaminated	
abrasive media			
damping	opening closing		
flow direction	A ⇨ B	as marked	bi-directional (max. 16 bar)
switching cycles	1/min	200	
switching time	ms	opening 25 closing 25	
media temperature	°C	DC: -10 to +100 AC: -10 to +100	-30 to +120 -30 to +120
ambient temperature	°C	DC: -10 to +80 AC: -10 to +80	
limit switches			inductive
manual override			
approvals			LR/DNV/WAZ
mounting			mounting brackets
weight	kg	MK 1.5	
additional equipment			upon request

electrical specifications			**options**
nominal voltage	U_n	DC 24 V +5%/-10%	special voltage upon request
	U_n	AC 230 V +5%/-10% 40-60 Hz	special voltage upon request
actuation	DC	direct-current magnet	
	AC	direct-current magnet with integrated rectifier	
insulating rating	H	180°C	
protection	IP65		
energized duty rating	ED	100%	
connection		plug acc. DIN EN 175301-803 form A, 4 positions x90° / wire diameter 6-8 mm	terminal box M16x1,5
optional	M12x1	connector acc. DESINA	connector acc. VDMA
additional equipment		illuminated plug with varistor	
current consumption	N-coil	DC 24 V 1.04 A AC 230 V 40-60 Hz 0.13 A	
	H-coil		DC 24 V 1.28 A AC 230 V 40-60 Hz 0.16 A
explosion proof			terminal box M16x1,5 Ⓔx II 3G Ex ec IIC T3 Ta -20...+80°C Gc Ⓔx II 3D Ex tc IIIC T195°C Ta -20...+80°C Dc Ⓔx II 3G Ex h IIC T3 Gc Ⓔx II 3D Ex h IIIC T195°C Dc
limit switches		inductive (B)	normally open-PNP

specifications not highlighted are standard
specifications highlighted in grey are optional

müller co-ax gmbh • Friedrich-Müller-Str. 1 • 74670 Forchtenberg • Germany • fon +49(0)7947/828-0 • fax +49(0)7947/828-11 • Email info@co-ax.com

coax® data sheet - coaxial valve

type MK 10

function: **NC**
closed when not energized

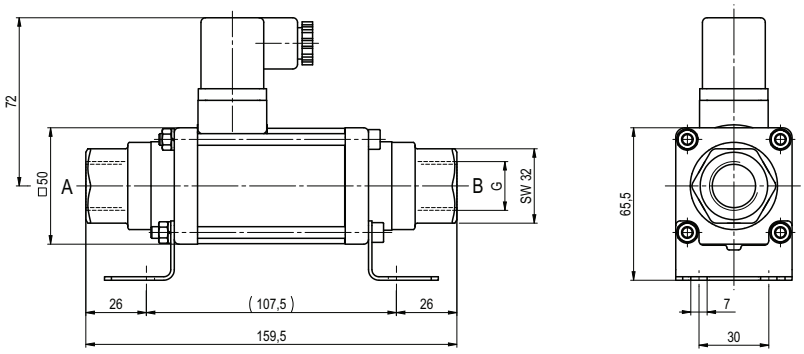

function: **NO**
open when not energized

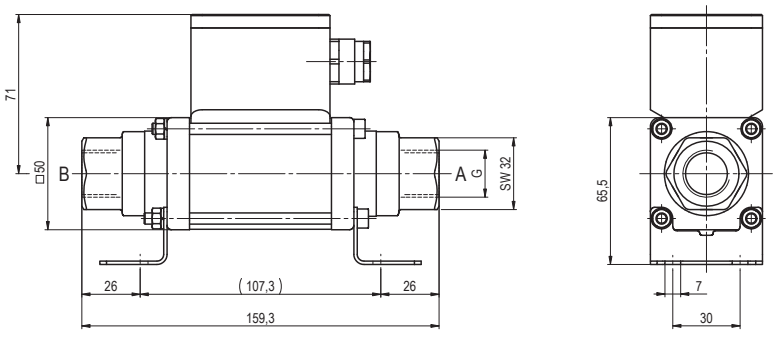

müller co-ax shall retain the rights to these documents. Modifications to the documents are strictly prohibited.
Rights reserved to make technical alterations • Not responsible for printing errors • Detailled drawings can be obtained upon request

coax® data sheet - coaxial valve

type MK 10 63/100 bar

08/2026

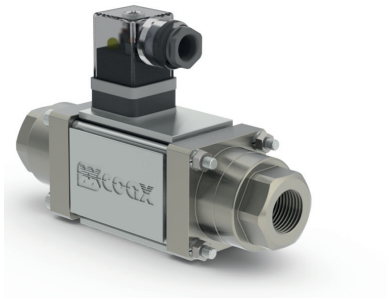

⚠ Above stated body materials refer to the valve port connections that get in contact with the media only!

details needed

- orifice
- port
- function NC/NO
- operating pressure
- flow rate
- media
- media temperature
- ambient temperature
- nominal voltage

⚠ The valves' technical design is based on media and application requirements. This can lead to deviations from the general specifications shown on the data sheet with regards to the design, sealing materials and characteristics.

⚠ If order or application specifications are incomplete or imprecise there exists a risk of an incorrect technical design of the valve for the required application. As a consequence, the physical and / or chemical properties of the materials or seals used, may not be suitable for the intended application. To avoid hydraulic shocks in pipelines, the flow velocities must be taken into account when designing valves for liquids.

2/2-way valve	**direct acting**	
pressure range	PN 0-63 / 0-100 bar	
orifice	DN 10 / 8 mm	
connection	thread	
function	valve normally closed symbol **NC**	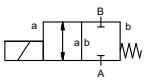
	valve normally open symbol **NO**	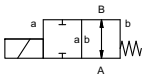
operating principle	pressure balanced, with spring return	
body material	① brass	②
	③	⑤
	④	⑥ stainless steel
	⓪ aluminium	
valve seat	synthetic materials on metal	
seal materials	NBR	PTFE, FPM, EPDM

				options
	general specifications			
ports	MK	threads G 1/4 - G 3/4		special threads
function		NC		NO
pressure range	bar	0-63 | 0-100		
		A ⇨ B max. 63|100 / B ⇨ A max. 30|75		
Kv value	m³/h	2,3 | 1,6		
vacuum	leak rate			< 10^{-6} mbar•l•s^{-1}
pressure-vacuum	P_1⇔ P_2			upon request
back pressure	P_2 > P_1			upon request
media		gaseous - liquid - contaminated		
abrasive media				
damping	opening			
	closing			
flow direction	A ⇨ B	as marked		bi-directional upon request
switching cycles	1/min	200		
switching time	ms	opening 135		
		closing 20		
media temperature	°C	DC: -10 to +100		-30 to +120
		AC: -10 to +100		-30 to +120
ambient temperature	°C	DC: -10 to +80		
		AC: -10 to +80		
limit switches				upon request
manual override				
approvals				LR/DNV/WAZ
mounting				mounting brackets
weight	kg	MK 2,2		
additional equipment				upon request

				options
	electrical specifications			
nominal voltage	U_n	DC 24 V +5%/-10%		special voltage upon request
	U_n	AC 230 V +5%/-10% 40-60 Hz		special voltage upon request
actuation	DC	direct-current magnet		
	AC	direct-current magnet with integrated rectifier		
insulating rating	H	180°C		
protection	IP65			
energized duty rating	ED	100%		
connection		plug acc. DIN EN 175301-803 form A, 4 positions x90° / wire diameter 6-8 mm		terminal box M16x1,5
optional	M12x1	connector acc. DESINA		connector acc. VDMA
additional equipment		illuminated plug with varistor		
current draw	N-coil	DC 24 V 1,33 A		
		AC 230 V 40-60 Hz 0,14 A		
explosion proof				terminal box M16x1,5
				⟨Ex⟩II 3G Ex ec IIC T3 Ta -20...+80°C Gc
				⟨Ex⟩II 3D Ex tc IIIC T195°C Ta -20...+80°C Dc
				⟨Ex⟩II 3G Ex h IIC T3 Gc
				⟨Ex⟩II 3D Ex h IIIC T195°C Dc
limit switches		inductive (B)		normally open-PNP

specifications not highlighted are standard
specifications highlighted in grey are optional

müller co-ax gmbh • Friedrich-Müller-Str. 1 • 74670 Forchtenberg • Germany • fon +49(0)7947/828-0 • fax +49(0)7947/828-11 • Email info@co-ax.com

coax® data sheet - coaxial valve

type MK 10 63/100 bar

function: **NC**
closed when not energized

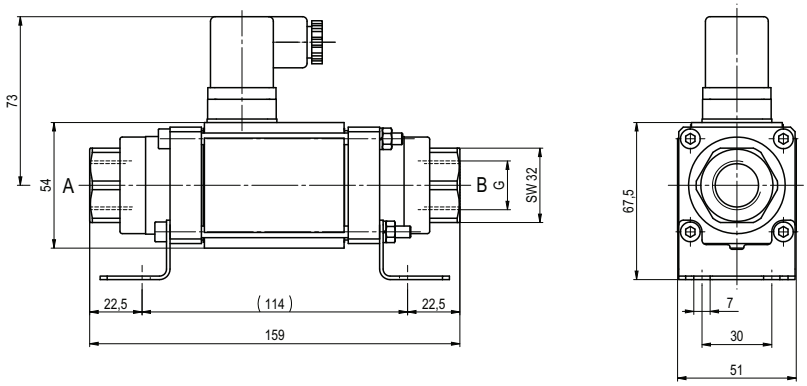

function: **NO**
open when not energized

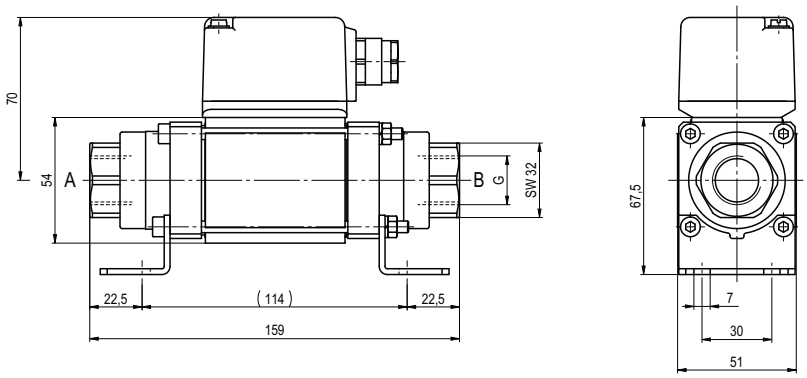

müller co-ax shall retain the rights to these documents. Modifications to the documents are strictly prohibited.
Rights reserved to make technical alterations • Not responsible for printing errors • Detailed drawings can be obtained upon request

coax® data sheet - coaxial valve

type MK 15
FK 15

06/2026

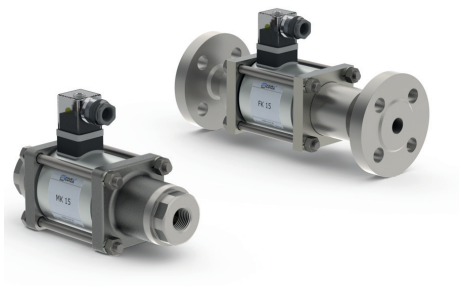

2/2-way valve	**direct acting**
pressure range	PN 0-63 / 0-100 bar
orifice	DN 15 / 10 mm
connection	thread/flange
function	valve normally closed symbol **NC**
	valve normally open symbol **NO**
operating principle	pressure balanced, with spring return
body material	① brass ② steel galvanized ③ brass, nickel plated ⑤ without non-ferr. Metals ④ steel, nickel plated ⑥ stainless steel ⓪ aluminium
valve seat	synthetic materials on metal
seal materials	NBR PTFE, FPM, CR, EPDM

⚠ Above stated body materials refer to the valve port connections that get in contact with the media only!

details needed

- orifice
- port
- function NC/NO
- operating pressure
- flow rate
- media
- media temperature
- ambient temperature
- nominal voltage

	general specifications		options
ports	MK	threads G 3/8 - G 3/4	special threads
	FK	flanges PN 16 / 40 / 100	special flanges
function		NC	NO
pressure range	bar	0-16 / 0-40 / 0-63 | 0-100	> 100 bar upon request
Kv value	m^3/h	6,0 | 2,5	
vacuum	leak rate		< 10^{-6} mbar•l•s^{-1}
pressure-vacuum	$P_1 \Leftrightarrow P_2$		upon request
back pressure	$P_2 > P_1$		available (max. 16 bar)
media		gaseous - liquid - highly viscous - gelatinous - contaminated	
abrasive media			upon request
damping	opening		
	closing		available
flow direction	A ⇨ B	as marked	bi-directional (max. 16 bar)
switching cycles	1/min	200	
switching time	ms	opening 80	
		closing 80	
media temperature	°C	DC: -20 to +100	-40 to +160
		AC: -20 to +100	-40 to +160
ambient temperature	°C	DC: -20 to +80	
		AC: -20 to +80	
limit switches			inductive / mechanical
manual override			available
approvals			LR/DNV/WAZ
mounting			mounting brackets
weight	kg	MK 3,8 FK 5,0	
additional equipment			upon request

⚠ The valves' technical design is based on media and application requirements. This can lead to deviations from the general specifications shown on the data sheet with regards to the design, sealing materials and characteristics.

	electrical specifications		options
nominal voltage	U_n	DC 24 V +5%/-10%	special voltage upon request
	U_n	AC 230 V +5%/-10% 40-60 Hz	special voltage upon request
actuation	DC	direct-current magnet	
	AC	direct-current magnet with integrated rectifier	above 100 °C with separate rectifier
insulating rating	H	180°C	
protection	IP65		
energized duty rating	ED	100%	
connection		plug acc. DIN EN 175301-803 form A, 4 positions x90° / wire diameter 6-8 mm	terminal box M16x1,5
optional	M12x1	connector acc. DESINA	connector acc. VDMA
additional equipment		illuminated plug with varistor	
current draw	N-coil	DC 24 V 1,67 A	
		AC 230 V 40-60 Hz 0,15 A	
	H-coil		DC 24 V 2,29 A
			AC 230 V 40-60 Hz 0,24 A
explosion proof			terminal box M16x1,5
			⟨Ex⟩ II 3G Ex ec IIC T3 Ta -20...+80°C Gc
			⟨Ex⟩ II 3D Ex tc IIIC T195°C Ta -20...+80°C Dc
			⟨Ex⟩ II 3G Ex h IIC T3 Gc
			⟨Ex⟩ II 3D Ex h IIIC T195°C Dc
limit switches		inductive (I)	normally open-PNP
		inductive (B)	normally open-PNP
		mechanical	single pole double throw-SPDT

⚠ If order or application specifications are incomplete or imprecise there exists a risk of an incorrect technical design of the valve for the required application. As a consequence, the physical and / or chemical properties of the materials or seals used, may not be suitable for the intended application. To avoid hydraulic shocks in pipelines, the flow velocities must be taken into account when designing valves for liquids.

specifications not highlighted are standard
specifications highlighted in grey are optional

müller co-ax gmbh • Friedrich-Müller-Str. 1 • 74670 Forchtenberg • Germany • fon +49(0)7947/828-0 • fax +49(0)7947/828-11 • Email info@co-ax.com

coax® data sheet - coaxial valve

type MK 15
FK 15

function: **NC**
closed when not energized

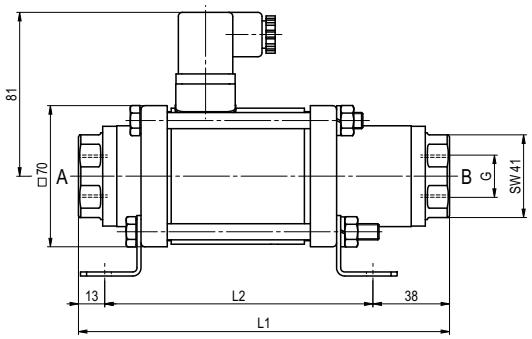

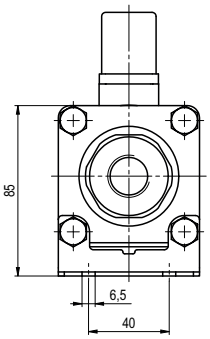

constructive length	L1	L2	L3
standard	184	133	241
with inductive limit switches	224	173	281
with manual override / inductive limit switches	224	173	281
with mechanical limit switches	224	173	281

flanges PN	DIN	ØD	Øk	Ød
16	EN 1092-1	95	65	14
40	EN 1092-1	95	65	14
100	EN 1092-1	105	75	14

function: **NO**
open when not energized

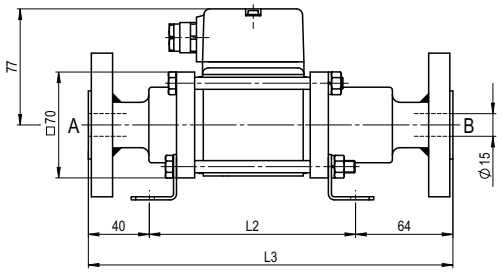

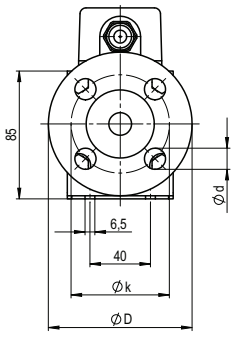

müller co-ax shall retain the rights to these documents. Modifications to the documents are strictly prohibited.
Rights reserved to make technical alterations • Not responsible for printing errors • Detailed drawings can be obtained upon request

coax® data sheet - coaxial valve

type MK 20
FK 20

08/2022

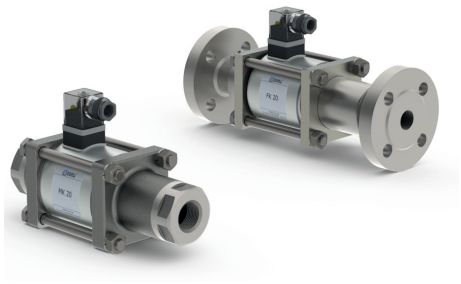

2/2-way valve	**direct acting**
pressure range	PN 0-100 bar
orifice	DN 20 mm
connection	thread/flange
function	valve normally closed symbol **NC**

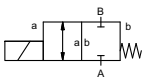

	valve normally open symbol **NO**

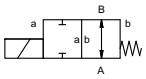

operating principle	pressure balanced, with spring return
body material	① brass ② steel galvanized ③ brass, nickel plated ⑤ without non-ferr. Metals ④ steel, nickel plated ⑥ stainless steel ⓪ aluminium
valve seat	synthetic materials on metal
seal materials	NBR PTFE, FPM, CR, EPDM

⚠ Above stated body materials refer to the valve port connections that get in contact with the media only!

details needed

- orifice
- port
- function NC/NO
- operating pressure
- flow rate
- media
- media temperature
- ambient temperature
- nominal voltage

	general specifications		options
ports	MK	threads G 3/4 - G 1 1/4	special threads
	FK	flanges PN 16 / 40 / 100	special flanges
function		NC	NO
pressure range	bar	0-16 / 0-40 / 0-63 / 0-100	> 100 bar upon request
Kv value	m^3/h	8.4	
vacuum	leak rate		< 10^{-6} mbar•l•s^{-1}
pressure-vacuum	$P_1 \Leftrightarrow P_2$		upon request
back pressure	$P_2 > P_1$		available (max. 16 bar)
media		gaseous - liquid - highly viscous - gelatinous - contaminated	
abrasive media			upon request
damping	opening		
	closing		available
flow direction	A ⇨ B	as marked	bi-directional (max. 16 bar)
switching cycles	1/min	150	
switching time	ms	opening 110	
		closing 110	
media temperature	°C	DC: -20 to +100	-40 to +160
		AC: -20 to +100	-40 to +160
ambient temperature	°C	DC: -20 to +80	
		AC: -20 to +80	
limit switches			inductive / mechanical
manual override			available
approvals			LR/DNV/WAZ
mounting			mounting brackets
weight	kg	MK 5.5 FK 7.5	
additional equipment			upon request

⚠ The valves' technical design is based on media and application requirements. This can lead to deviations from the general specifications shown on the data sheet with regards to the design, sealing materials and characteristics.

	electrical specifications		options
nominal voltage	U_n	DC 24 V +5%/-10%	special voltage upon request
	U_n	AC 230 V +5%/-10% 40-60 Hz	special voltage upon request
actuation	DC	direct-current magnet	
	AC	direct-current magnet with integrated rectifier	above 100 °C with separate rectifier
insulating rating	H	180°C	
protection	IP65		
energized duty rating	ED	100%	
connection		plug acc. DIN EN 175301-803 form A, 4 positions x90° / wire diameter 6-8 mm	terminal box M16x1,5
optional	M12x1	connector acc. DESINA	connector acc. VDMA
additional equipment		illuminated plug with varistor	
current consumption	N-coil	DC 24 V 1.56 A	
		AC 230 V 40-60 Hz 0.16 A	
	H-coil		DC 24 V 2.24 A
			AC 230 V 40-60 Hz 0.28 A
explosion proof			terminal box M16x1,5
			⟨Ex⟩ II 3G Ex ec IIC T3 Ta -20...+80°C Gc
			⟨Ex⟩ II 3D Ex tc IIIC T195°C Ta -20...+80°C Dc
			⟨Ex⟩ II 3G Ex h IIC T3 Gc
			⟨Ex⟩ II 3D Ex h IIIC T195°C Dc
limit switches		inductive (I)	normally open-PNP
		inductive (B)	normally open-PNP
		mechanical	single pole double throw-SPDT

⚠ If order or application specifications are incomplete or imprecise there exists a risk of an incorrect technical design of the valve for the required application. As a consequence, the physical and / or chemical properties of the materials or seals used, may not be suitable for the intended application. To avoid hydraulic shocks in pipelines, the flow velocities must be taken into account when designing valves for liquids.

specifications not highlighted are standard
specifications highlighted in grey are optional

müller co-ax gmbh • Friedrich-Müller-Str. 1 • 74670 Forchtenberg • Germany • fon +49(0)7947/828-0 • fax +49(0)7947/828-11 • Email info@co-ax.com

coax® data sheet - coaxial valve

type MK 20
FK 20

function: **NC**
closed when not energized

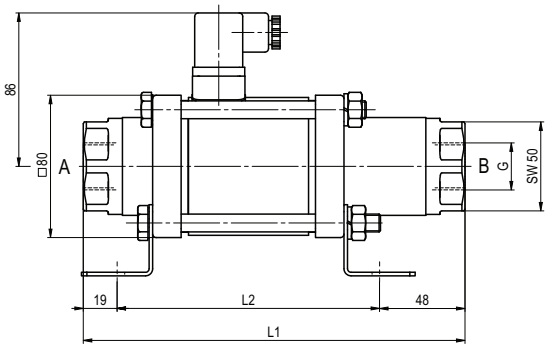

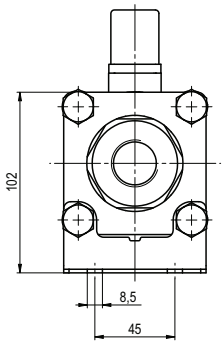

constructive length	L1	L2	L3
standard	216	148	269
with inductive limit switches	259	192	313
with manual override / inductive limit switches	259	192	313
with mechanical limit switches	259	192	313

flanges PN	DIN	ØD	Øk	Ød
16	EN 1092-1	105	75	14
40	EN 1092-1	105	75	14
100	EN 1092-1	130	90	18

function: **NO**
open when not energized

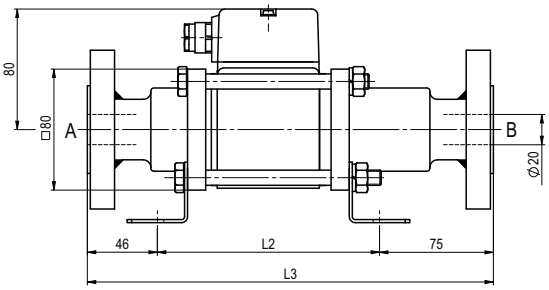

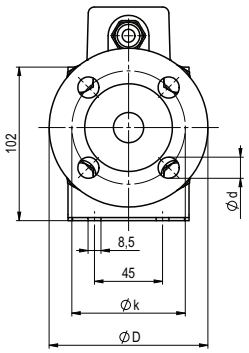

müller co-ax shall retain the rights to these documents. Modifications to the documents are strictly prohibited.
Rights reserved to make technical alterations • Not responsible for printing errors • Detailled drawings can be obtained upon request

coax® data sheet - coaxial valve

type MK 25
FK 25

08/2022

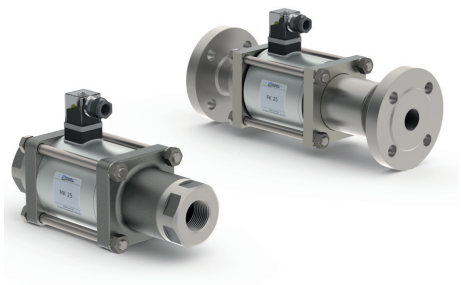

2/2-way valve	**direct acting**
pressure range	PN 0-100 bar
orifice	DN 25 mm
connection	thread/flange
function	valve normally closed symbol **NC**

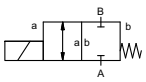

	valve normally open symbol **NO**

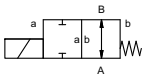

operating principle	pressure balanced, with spring return
body material	① brass ② steel galvanized ③ brass, nickel plated ⑤ without non-ferr. Metals ④ steel, nickel plated ⑥ stainless steel ⓪ aluminium
valve seat	synthetic materials on metal
seal materials	NBR PTFE, FPM, CR, EPDM

⚠ Above stated body materials refer to the valve port connections that get in contact with the media only!

details needed

- orifice
- port
- function NC/NO
- operating pressure
- flow rate
- media
- media temperature
- ambient temperature
- nominal voltage

	general specifications		options
ports	MK	threads G 1 - G 1 1/2	special threads
	FK	flanges PN 16 / 40 / 100	special flanges
function		NC	NO
pressure range	bar	0-16 / 0-40 / 0-63 / 0-100	> 100 bar upon request
Kv value	m^3/h	13.0	
vacuum	leak rate		< 10^{-6} mbar•l•s^{-1}
pressure-vacuum	$P_1 \Leftrightarrow P_2$		upon request
back pressure	$P_2 > P_1$		available (max. 16 bar)
media		gaseous - liquid - highly viscous - gelatinous - contaminated	
abrasive media			upon request
damping	opening		
	closing		available
flow direction	A ⇨ B	as marked	bi-directional (max. 16 bar)
switching cycles	1/min	130	
switching time	ms	opening 130	
		closing 130	
media temperature	°C	DC: -20 to +100	-40 to +160
		AC: -20 to +100	-40 to +160
ambient temperature	°C	DC: -20 to +80	
		AC: -20 to +80	
limit switches			inductive / mechanical
manual override			available
approvals			LR/DNV/WAZ
mounting			mounting brackets
weight	kg	MK 8.0 FK 10.5	
additional equipment			upon request

⚠ The valves' technical design is based on media and application requirements. This can lead to deviations from the general specifications shown on the data sheet with regards to the design, sealing materials and characteristics.

	electrical specifications		options
nominal voltage	U_n	DC 24 V +5%/-10%	special voltage upon request
	U_n	AC 230 V +5%/-10% 40-60 Hz	special voltage upon request
actuation	DC	direct-current magnet	
	AC	direct-current magnet with integrated rectifier	above 100 °C with separate rectifier
insulating rating	H	180°C	
protection	IP65		
energized duty rating	ED	100%	
connection		plug acc. DIN EN 175301-803 form A, 4 positions x90° / wire diameter 6-8 mm	terminal box M16x1,5
optional	M12x1	connector acc. DESINA	connector acc. VDMA
additional equipment		illuminated plug with varistor	
current consumption	N-coil	DC 24 V 2.70 A	
		AC 230 V 40-60 Hz 0.36 A	
	H-coil		DC 24 V 2.70 A
			AC 230 V 40-60 Hz 0.36 A
explosion proof			terminal box M16x1,5
			⟨Ex⟩ II 3G Ex ec IIC T3 Ta -20...+80°C Gc
			⟨Ex⟩ II 3D Ex tc IIIC T195°C Ta -20...+80°C Dc
			⟨Ex⟩ II 3G Ex h IIC T3 Gc
			⟨Ex⟩ II 3D Ex h IIIC T195°C Dc
limit switches		inductive (I)	normally open-PNP
		inductive (B)	normally open-PNP
		mechanical	single pole double throw-SPDT

⚠ If order or application specifications are incomplete or imprecise there exists a risk of an incorrect technical design of the valve for the required application. As a consequence, the physical and / or chemical properties of the materials or seals used, may not be suitable for the intended application. To avoid hydraulic shocks in pipelines, the flow velocities must be taken into account when designing valves for liquids.

specifications not highlighted are standard
specifications highlighted in grey are optional

müller co-ax gmbh • Friedrich-Müller-Str. 1 • 74670 Forchtenberg • Germany • fon +49(0)7947/828-0 • fax +49(0)7947/828-11 • Email info@co-ax.com

coax® data sheet - coaxial valve

type MK 25
FK 25

function: **NC**
closed when not energized

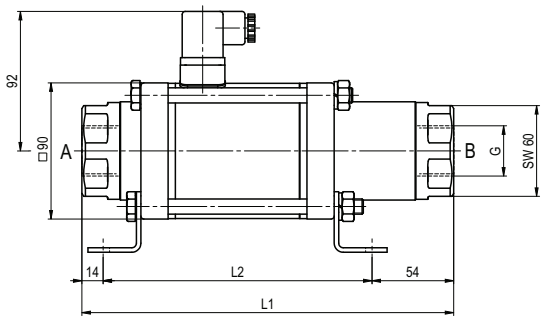

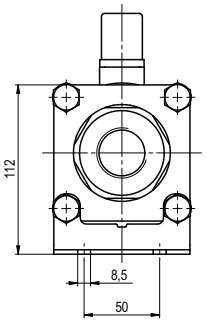

constructive length	L1	L2	L3
standard	246	178	302
with inductive limit switches	287	219	343
with manual override / inductive limit switches	299	231	355
with mechanical limit switches	287	219	343

flanges PN	DIN	ØD	Øk	Ød
16	EN 1092-1	115	85	14
40	EN 1092-1	115	85	14
100	EN 1092-1	140	100	18

function: **NO**
open when not energized

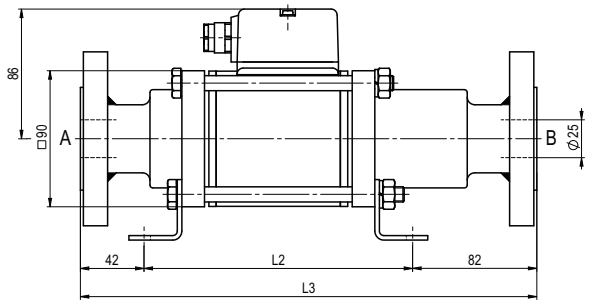

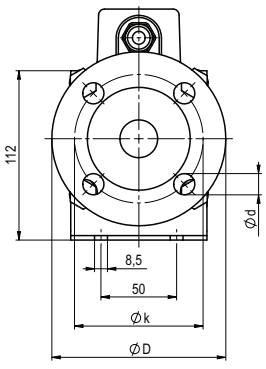

müller co-ax shall retain the rights to these documents. Modifications to the documents are strictly prohibited.
Rights reserved to make technical alterations • Not responsible for printing errors • Detailled drawings can be obtained upon request

coax® data sheet - coaxial valve

type MK 32
FK 32

08/2022



2/2-way valve	**direct acting**
pressure range	PN 0-100 bar
orifice	DN 32 mm
connection	thread/flange
function	valve normally closed symbol **NC**

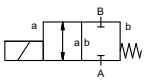

valve
normally open
symbol **NO**

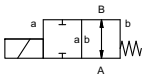

operating principle	pressure balanced, with spring return
body material	① brass ② steel galvanized ③ brass, nickel plated ⑤ without non-ferr. Metals ④ steel, nickel plated ⑥ stainless steel
valve seat	synthetic materials on metal
seal materials	NBR PTFE, FPM, CR, EPDM

⚠ Above stated body materials refer to the valve port connections that get in contact with the media only!

details needed

- orifice
- port
- function NC/NO
- operating pressure
- flow rate
- media
- media temperature
- ambient temperature
- nominal voltage

	general specifications		options
ports	MK	threads G 1 1/4 - G 1 1/2	special threads
	FK	flanges PN 16 / 40 / 100	special flanges
function		NC	NO
pressure range	bar	0-16 / 0-40 / 0-63 / 0-100	
Kv value	m^3/h	17.4	
vacuum	leak rate		< 10^{-6} mbar•l•s^{-1}
pressure-vacuum	$P_1 \Leftrightarrow P_2$		upon request
back pressure	$P_2 > P_1$		available (max. 16 bar)
media		gaseous - liquid - highly viscous - gelatinous - contaminated	
abrasive media			upon request
damping	opening		
	closing		available
flow direction	A ⇨ B	as marked	bi-directional (max. 16 bar)
switching cycles	1/min	120	
switching time	ms	opening 440	
		closing 250	
media temperature	°C	DC: -20 to +100	-40 to +160
		AC: -20 to +100	-40 to +160
ambient temperature	°C	DC: -20 to +80	
		AC: -20 to +80	
limit switches			inductive / mechanical
manual override			available
approvals			LR/DNV/WAZ
mounting			mounting brackets
weight	kg	MK 13.5 FK 17.5	
additional equipment			upon request

⚠ The valves' technical design is based on media and application requirements. This can lead to deviations from the general specifications shown on the data sheet with regards to the design, sealing materials and characteristics.

	electrical specifications		options
nominal voltage	U_n	DC 24 V +5%/-10%	special voltage upon request
	U_n	AC 230 V +5%/-10% 40-60 Hz	special voltage upon request
actuation	DC	direct-current magnet	
	AC	direct-current magnet with integrated rectifier	above 100 °C with separate rectifier
insulating rating	H	180°C	
protection	IP65		
energized duty rating	ED	100%	
connection		plug acc. DIN EN 175301-803 form A, 4 positions x90° / wire diameter 6-8 mm	terminal box M16x1,5
optional			
additional equipment		illuminated plug with varistor	
current consumption	N-coil	DC 24 V 2.07 A	
		AC 230 V 40-60 Hz 0.28 A	
	H-coil		DC 24 V 3.24 A
			AC 230 V 40-60 Hz 0.44 A
explosion proof			terminal box M16x1,5
			⟨Ex⟩ II 3G Ex ec IIC T3 Ta -20...+80°C Gc
			⟨Ex⟩ II 3D Ex tc IIIC T195°C Ta -20...+80°C Dc
			⟨Ex⟩ II 3G Ex h IIC T3 Gc
			⟨Ex⟩ II 3D Ex h IIIC T195°C Dc
limit switches		inductive (I)	normally open-PNP
		inductive (B)	normally open-PNP
		mechanical	single pole double throw-SPDT

⚠ If order or application specifications are incomplete or imprecise there exists a risk of an incorrect technical design of the valve for the required application. As a consequence, the physical and / or chemical properties of the materials or seals used, may not be suitable for the intended application. To avoid hydraulic shocks in pipelines, the flow velocities must be taken into account when designing valves for liquids.

specifications not highlighted are standard
specifications highlighted in grey are optional

müller co-ax gmbh • Friedrich-Müller-Str. 1 • 74670 Forchtenberg • Germany • fon +49(0)7947/828-0 • fax +49(0)7947/828-11 • Email info@co-ax.com

coax® data sheet - coaxial valve

type MK 32
FK 32

function: **NC**
closed when not energized

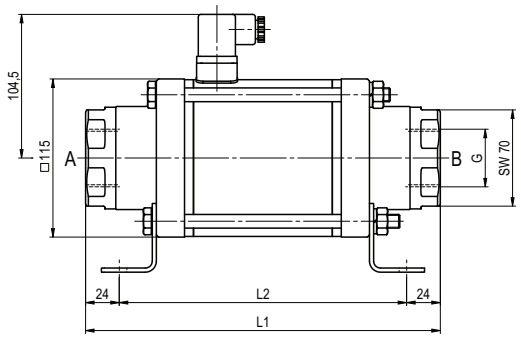

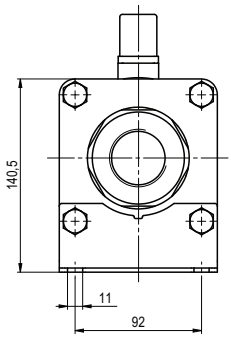

constructive length	L1	L2	L3
standard	258	210	324
with inductive limit switches	299	251	365
with manual override / inductive limit switches	299	251	365
with mechanical limit switches	299	251	365

flanges PN	DIN	ØD	Øk	Ød
16	EN 1092-1	140	100	18
40	EN 1092-1	140	100	18
100	EN 1092-1	155	110	22

function: **NO**
open when not energized

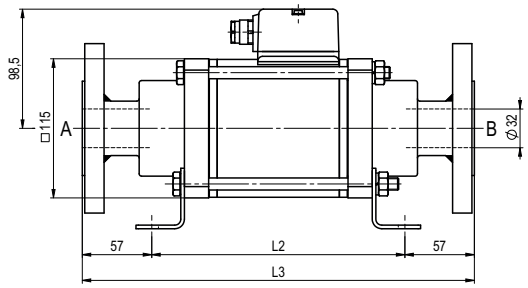

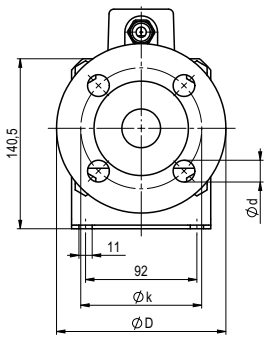

müller co-ax shall retain the rights to these documents. Modifications to the documents are strictly prohibited.
Rights reserved to make technical alterations • Not responsible for printing errors • Detailled drawings can be obtained upon request

coax® data sheet - coaxial valve

type MK 40
FK 40

08/2022



2/2-way valve	**direct acting**
pressure range	PN 0-63 bar (NO: 0-40 bar)
orifice	DN 40 mm
connection	thread/flange
function	valve normally closed symbol **NC**
	valve normally open symbol **NO**
operating principle	pressure balanced, with spring return
body material	① brass ② steel galvanized ③ brass, nickel plated ⑤ without non-ferr. Metals ④ steel, nickel plated ⑥ stainless steel
valve seat	synthetic materials on metal
seal materials	NBR PTFE, FPM, CR, EPDM

⚠ Above stated body materials refer to the valve port connections that get in contact with the media only!

details needed

- orifice
- port
- function NC/NO
- operating pressure
- flow rate
- media
- media temperature
- ambient temperature
- nominal voltage

	general specifications		options
ports	MK	threads G 1 1/2 - G 2	special threads
	FK	flanges PN 16 / 40 / 100	special flanges
function		NC	NO
pressure range	bar	0-16 / 0-40 / 0-63	0-16 / 0-40
Kv value	m^3/h	21.8	
vacuum	leak rate		< 10^{-6} mbar•l•s^{-1}
pressure-vacuum	$P_1 \Leftrightarrow P_2$		upon request
back pressure	$P_2 > P_1$		available (max. 16 bar)
media		gaseous - liquid - highly viscous - gelatinous - contaminated	
abrasive media			upon request
damping	opening closing		 available
flow direction	A ⇨ B	as marked	bi-directional (max. 16 bar)
switching cycles	1/min	90	
switching time	ms	opening 520 closing 150	
media temperature	°C	DC: -20 to +100 AC: -20 to +100	-40 to +160 -40 to +160
ambient temperature	°C	DC: -20 to +80 AC: -20 to +80	
limit switches			inductive / mechanical
manual override			available
approvals			LR/DNV/WAZ
mounting			mounting brackets
weight	kg	MK 14.0 FK 18.0	
additional equipment			upon request

⚠ The valves' technical design is based on media and application requirements. This can lead to deviations from the general specifications shown on the data sheet with regards to the design, sealing materials and characteristics.

	electrical specifications		options
nominal voltage	U_n	DC 24 V +5%/-10%	special voltage upon request
	U_n	AC 230 V +5%/-10% 40-60 Hz	special voltage upon request
actuation	DC	direct-current magnet	
	AC	direct-current magnet with integrated rectifier	above 100 °C with separate rectifier
insulating rating	H	180°C	
protection	IP65		
energized duty rating	ED	100%	
connection		plug acc. DIN EN 175301-803 form A, 4 positions x90° / wire diameter 6-8 mm	terminal box M16x1,5
optional			
additional equipment		illuminated plug with varistor	
current consumption	N-coil	DC 24 V 2.07 A AC 230 V 40-60 Hz 0.28 A	
	H-coil		DC 24 V 3.24 A AC 230 V 40-60 Hz 0.44 A
explosion proof			terminal box M16x1,5 Ⓔx II 3G Ex ec IIC T3 Ta -20...+80°C Gc Ⓔx II 3D Ex tc IIIC T195°C Ta -20...+80°C Dc Ⓔx II 3G Ex h IIC T3 Gc Ⓔx II 3D Ex h IIIC T195°C Dc
limit switches		inductive (I) inductive (B) mechanical	normally open-PNP normally open-PNP single pole double throw-SPDT

⚠ If order or application specifications are incomplete or imprecise there exists a risk of an incorrect technical design of the valve for the required application. As a consequence, the physical and / or chemical properties of the materials or seals used, may not be suitable for the intended application. To avoid hydraulic shocks in pipelines, the flow velocities must be taken into account when designing valves for liquids.

specifications not highlighted are standard
specifications highlighted in grey are optional

müller co-ax gmbh • Friedrich-Müller-Str. 1 • 74670 Forchtenberg • Germany • fon +49(0)7947/828-0 • fax +49(0)7947/828-11 • Email info@co-ax.com

coax® data sheet - coaxial valve

type MK 40
FK 40

function: **NC**
closed when not energized

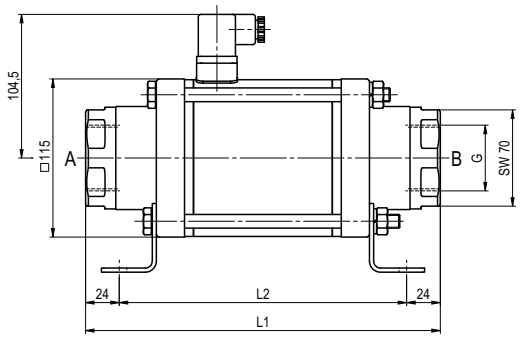

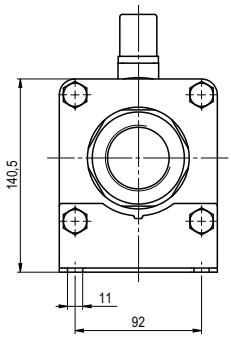

constructive length	L1	L2	L3
standard	258	210	324
with inductive limit switches	299	251	365
with manual override / inductive limit switches	299	251	365
with mechanical limit switches	299	251	365

flanges PN	DIN	ØD	Øk	Ød
16	EN 1092-1	150	110	18
40	EN 1092-1	150	110	18
100	EN 1092-1	170	125	22

function: **NO**
open when not energized

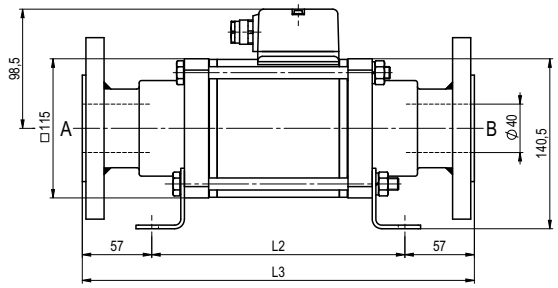

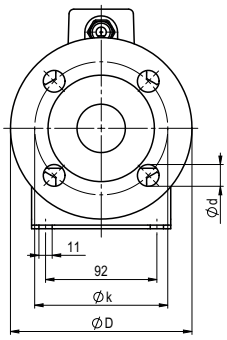

müller co-ax shall retain the rights to these documents. Modifications to the documents are strictly prohibited.
Rights reserved to make technical alterations • Not responsible for printing errors • Detailled drawings can be obtained upon request

coax® data sheet - coaxial valve

type MK 50
FK 50

01/2024



2/2-way valve	**direct acting**
pressure range	PN 0-16 bar
orifice	DN 50 mm
connection	thread/flange
function	valve normally closed symbol **NC**

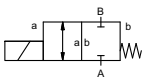

	valve normally open symbol **NO**

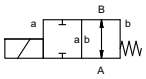

operating principle	pressure balanced, with spring return
body material	① brass ② steel galvanized ③ brass, nickel plated ⑤ without non-ferr. Metals ④ steel, nickel plated ⑥ stainless steel
valve seat	synthetic materials on metal
seal materials	NBR PTFE, FPM, CR, EPDM

⚠ Above stated body materials refer to the valve port connections that get in contact with the media only!

details needed

- orifice
- port
- function NC/NO
- operating pressure
- flow rate
- media
- media temperature
- ambient temperature
- nominal voltage

	general specifications		options
ports	MK	threads G 2	special threads
	FK	flanges PN 16	special flanges
function		NC	NO
pressure range	bar	0-16	
Kv value	m^3/h	38,0	
vacuum	leak rate		< 10^{-6} mbar•l•s^{-1}
pressure-vacuum	$P_1 \Leftrightarrow P_2$		upon request
back pressure	$P_2 > P_1$		available (max. 10 bar)
media		gaseous - liquid - highly viscous - gelatinous - contaminated	
abrasive media			upon request
damping	opening		
	closing		available
flow direction	A ⇨ B	as marked	bi-directional (max. 10 bar)
switching cycles	1/min	40	
switching time	ms	opening 400	
		closing 400	
media temperature	°C	DC: -20 to +80	-20 to +120
		AC: -20 to +80	-20 to +120
ambient temperature	°C	DC: -20 to +80	
		AC: -20 to +80	
limit switches			inductive / mechanical
manual override			available
approvals			LR/DNV/WAZ
mounting			mounting brackets
weight	kg	MK 25,5 FK 31,0	
additional equipment			upon request

⚠ The valves' technical design is based on media and application requirements. This can lead to deviations from the general specifications shown on the data sheet with regards to the design, sealing materials and characteristics.

	electrical specifications		options
nominal voltage	U_n	DC 24 V +5%/-10%	special voltage upon request
	U_n	AC 230 V +5%/-10% 40-60 Hz	special voltage upon request
actuation	DC	direct-current magnet	
	AC	direct-current magnet with integrated rectifier	above 100 °C with separate rectifier
insulating rating	H	180°C	
protection	IP65		
energized duty rating	ED	100%	
connection		plug acc. DIN EN 175301-803 form A, 4 positions x90° / wire diameter 6-8 mm	terminal box M16x1,5
optional			
additional equipment		illuminated plug with varistor	
current consumption	N-coil	DC 24 V 2,55 A	
		AC 230 V 40-60 Hz 0,29 A	
	H-coil		DC 24 V 3,29 A
			AC 230 V 40-60 Hz 0,43 A
explosion proof			terminal box M16x1,5
			Ⓔx II 3G Ex ec IIC T3 Ta -20...+80°C Gc
			Ⓔx II 3D Ex tc IIIC T195°C Ta -20...+80°C Dc
			Ⓔx II 3G Ex h IIC T3 Gc
			Ⓔx II 3D Ex h IIIC T195°C Dc
limit switches		inductive (I)	normally open-PNP
		inductive (B)	normally open-PNP

⚠ If order or application specifications are incomplete or imprecise there exists a risk of an incorrect technical design of the valve for the required application. As a consequence, the physical and / or chemical properties of the materials or seals used, may not be suitable for the intended application. To avoid hydraulic shocks in pipelines, the flow velocities must be taken into account when designing valves for liquids.

specifications not highlighted are standard
specifications highlighted in grey are optional

müller co-ax gmbh • Friedrich-Müller-Str. 1 • 74670 Forchtenberg • Germany • fon +49(0)7947/828-0 • fax +49(0)7947/828-11 • Email info@co-ax.com

coax® data sheet - coaxial valve

type MK 50
FK 50

function: **NC**
closed when not energized

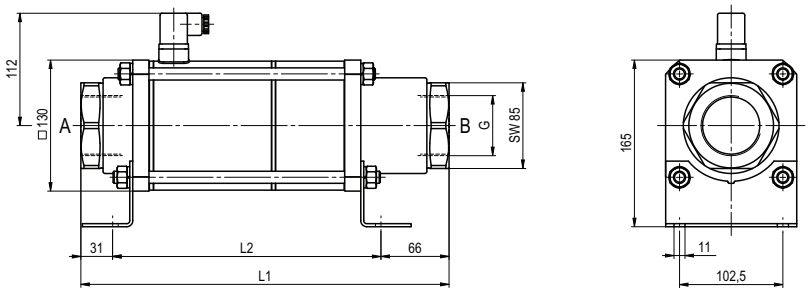

constructive length	L1	L2	L3
standard	365	268	438
with inductive limit switches	365	268	438
with manual override / inductive limit switches	365	268	438

flanges PN	DIN	ØD	Øk	Ød
16	EN 1092-1	165	125	18

function: **NO**
open when not energized

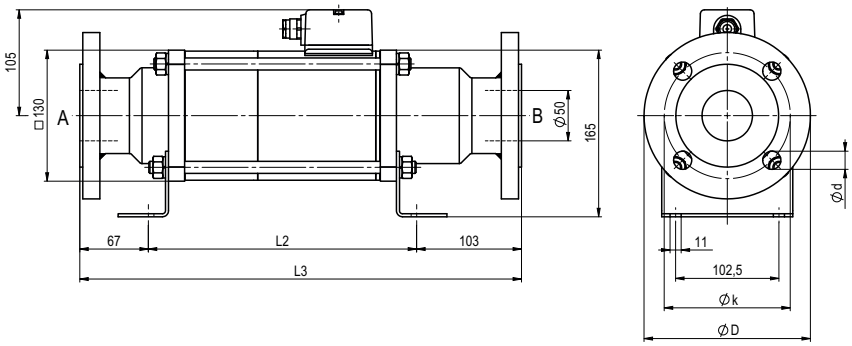

müller co-ax shall retain the rights to these documents. Modifications to the documents are strictly prohibited.
Rights reserved to make technical alterations • Not responsible for printing errors • Detailled drawings can be obtained upon request

coax® data sheet - coaxial valve

type FK 65

09/2026



2/2-way valve	**direct acting**
pressure range	PN 0-16 bar
orifice	DN 65 mm
connection	flange
function	valve normally closed symbol **NC**

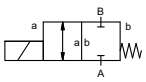

valve
normally open
symbol **NO**

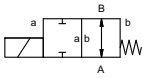

operating principle	pressure balanced, with spring return	
body material	⓪	② steel galvanized
	③	⑤ without non-ferr. Metals
	④ steel, nickel plated	⑥ stainless steel
valve seat	synthetic materials on metal	
seal materials	NBR	PTFE, FPM, EPDM

⚠ Above stated body materials refer to the valve port connections that get in contact with the media only!

details needed

- orifice
- port
- function NC/NO
- operating pressure
- flow rate
- media
- media temperature
- ambient temperature
- nominal voltage

	general specifications		**options**
ports	FK	flanges PN 16	special flanges
function		NC	NO
pressure range	bar	0-16	> 16 bar upon request
Kv value	m^3/h	62,0	
vacuum	leak rate		< 10^{-4} mbar•l•s^{-1}
pressure-vacuum	$P_1 \Leftrightarrow P_2$		upon request
back pressure	$P_2 > P_1$		available (max. 5 bar)
media		gaseous - liquid - highly viscous - gelatinous - contaminated	
abrasive media			upon request
damping	opening		
	closing		upon request
flow direction	A ⇨ B	as marked	bi-directional (max. 5 bar)
switching cycles	1/min	20	
switching time	ms	opening 600	
		closing 800	
media temperature	°C	DC: -20 to +80	
		AC: -20 to +80	
ambient temperature	°C	DC: -20 to +80	
		AC: -20 to +80	
limit switches			inductive
manual override			
approvals			LR/DNV/WAZ
mounting			
weight	kg	FK 35,0	
additional equipment			upon request

⚠ The valves' technical design is based on media and application requirements. This can lead to deviations from the general specifications shown on the data sheet with regards to the design, sealing materials and characteristics.

	electrical specifications		**options**
nominal voltage	U_n	DC 24 V +5%/-10%	special voltage upon request
	U_n	AC 230 V +5%/-10% 40-60 Hz	special voltage upon request
actuation	DC	direct-current magnet	
	AC	direct-current magnet with integrated rectifier	
insulating rating	H	180°C	
protection	IP65		
energized duty rating	ED	100%	
connection		plug acc. DIN EN 175301-803 form A, 4 positions x90° / wire diameter 6-8 mm	terminal box M16x1,5
optional			
additional equipment		illuminated plug with varistor	
current draw	N-coil	DC 24 V 4,36 A	
		AC 230 V 40-60 Hz 0,63 A	
	H-coil		
			AC 230 V 40-60 Hz 0,76 A
explosion proof			terminal box M16x1,5
			Ⓔx II 3G Ex ec IIC T3 Ta -20...+80°C Gc
			Ⓔx II 3D Ex tc IIIC T195°C Ta -20...+80°C Dc
			Ⓔx II 3G Ex h IIC T3 Gc
			Ⓔx II 3D Ex h IIIC T195°C Dc
limit switches		inductive (I)	normally open-PNP
		inductive (B)	normally open-PNP

⚠ If order or application specifications are incomplete or imprecise there exists a risk of an incorrect technical design of the valve for the required application. As a consequence, the physical and / or chemical properties of the materials or seals used, may not be suitable for the intended application. To avoid hydraulic shocks in pipelines, the flow velocities must be taken into account when designing valves for liquids.

specifications not highlighted are standard
specifications highlighted in grey are optional

müller co-ax gmbh • Friedrich-Müller-Str. 1 • 74670 Forchtenberg • Germany • fon +49(0)7947/828-0 • fax +49(0)7947/828-11 • Email info@co-ax.com

coax® data sheet - coaxial valve

type FK 65

function: **NC**
closed when not energized

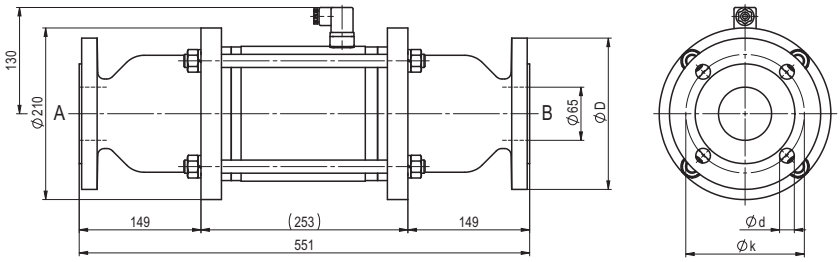

flanges PN	DIN	ØD	Øk	Ød
16	EN 1092-1	185	145	18

function: **NO**
open when not energized

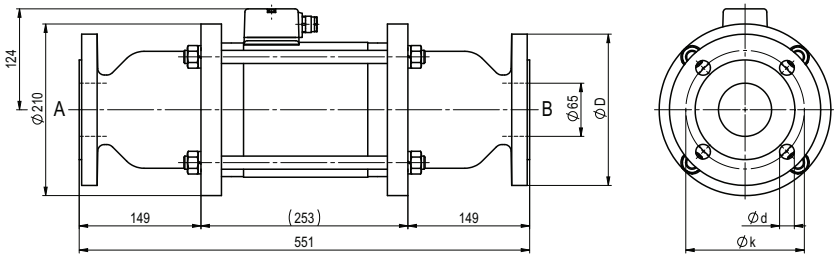

müller co-ax shall retain the rights to these documents. Modifications to the documents are strictly prohibited.
Rights reserved to make technical alterations • Not responsible for printing errors • Detailed drawings can be obtained upon request

coax® data sheet - coaxial valve

type FK 80

09/2026



⚠ Above stated body materials refer to the valve port connections that get in contact with the media only!

details needed

- orifice
- port
- function NC/NO
- operating pressure
- flow rate
- media
- media temperature
- ambient temperature
- nominal voltage

⚠ The valves' technical design is based on media and application requirements. This can lead to deviations from the general specifications shown on the data sheet with regards to the design, sealing materials and characteristics.

⚠ If order or application specifications are incomplete or imprecise there exists a risk of an incorrect technical design of the valve for the required application. As a consequence, the physical and / or chemical properties of the materials or seals used, may not be suitable for the intended application. To avoid hydraulic shocks in pipelines, the flow velocities must be taken into account when designing valves for liquids.

2/2-way valve	**direct acting**		
pressure range	PN 0-16 bar		
orifice	DN 80 mm		
connection	flange		
function	valve normally closed symbol **NC**	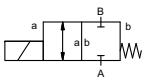	
	valve normally open symbol **NO**	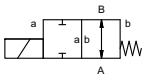	
operating principle	pressure balanced, with spring return		
body material	⓪		② steel galvanized
	③		⑤ without non-ferr. Metals
	④ steel, nickel plated		⑥ stainless steel
valve seat	synthetic materials on metal		
seal materials	NBR		PTFE, FPM, EPDM

	general specifications		**options**
ports	FK	flanges PN 16	special flanges
function		NC	NO
pressure range	bar	0-16	> 16 bar upon request
Kv value	m^3/h	92,0	
vacuum	leak rate		< 10^{-4} mbar•l•s^{-1}
pressure-vacuum	$P_1 \Leftrightarrow P_2$		upon request
back pressure	$P_2 > P_1$		available (max. 5 bar)
media		gaseous - liquid - highly viscous - gelatinous - contaminated	
abrasive media			upon request
damping	opening		
	closing		upon request
flow direction	A ⇨ B	as marked	bi-directional (max. 5 bar)
switching cycles	1/min	20	
switching time	ms	opening 600	
		closing 800	
media temperature	°C	DC: -20 to +80	
		AC: -20 to +80	
ambient temperature	°C	DC: -20 to +80	
		AC: -20 to +80	
limit switches			inductive
manual override			
approvals			LR/DNV/WAZ
mounting			
weight	kg	FK 38,0	
additional equipment			upon request

	electrical specifications		**options**
nominal voltage	U_n	DC 24 V +5%/-10%	special voltage upon request
	U_n	AC 230 V +5%/-10% 40-60 Hz	special voltage upon request
actuation	DC	direct-current magnet	
	AC	direct-current magnet with integrated rectifier	
insulating rating	H	180°C	
protection	IP65		
energized duty rating	ED	100%	
connection		plug acc. DIN EN 175301-803 form A, 4 positions x90° / wire diameter 6-8 mm	terminal box M16x1,5
optional			
additional equipment		illuminated plug with varistor	
current draw	N-coil	DC 24 V 4,36 A	
		AC 230 V 40-60 Hz 0,63 A	
	H-coil		
			AC 230 V 40-60 Hz 0,76 A
explosion proof			terminal box M16x1,5
			⟨Ex⟩ II 3G Ex ec IIC T3 Ta -20...+80°C Gc
			⟨Ex⟩ II 3D Ex tc IIIC T195°C Ta -20...+80°C Dc
			⟨Ex⟩ II 3G Ex h IIC T3 Gc
			⟨Ex⟩ II 3D Ex h IIIC T195°C Dc
limit switches		inductive (I)	normally open-PNP
		inductive (B)	normally open-PNP

specifications not highlighted are standard
specifications highlighted in grey are optional

müller co-ax gmbh • Friedrich-Müller-Str. 1 • 74670 Forchtenberg • Germany • fon +49(0)7947/828-0 • fax +49(0)7947/828-11 • Email info@co-ax.com

coax® data sheet - coaxial valve

type FK 80

function: **NC**
closed when not energized

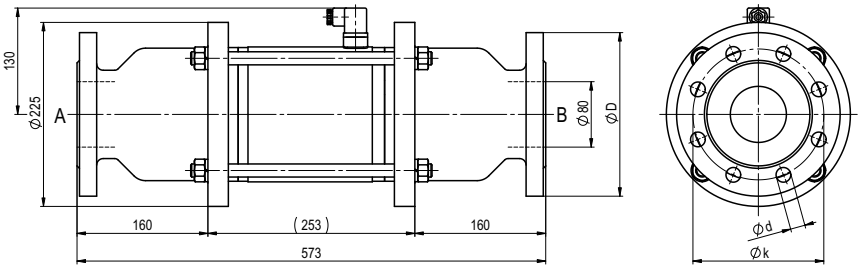

flanges PN	DIN	ØD	Øk	Ød
16	EN 1092-1	200	160	18

function: **NO**
open when not energized

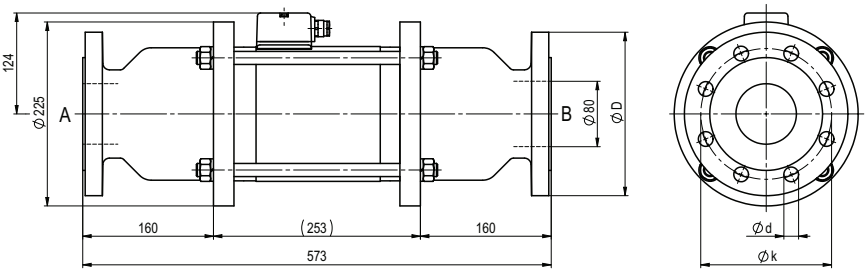

müller co-ax shall retain the rights to these documents. Modifications to the documents are strictly prohibited.
Rights reserved to make technical alterations • Not responsible for printing errors • Detailed drawings can be obtained upon request