coax® data sheet - coaxial valve

type MK 10 DR

08/2022

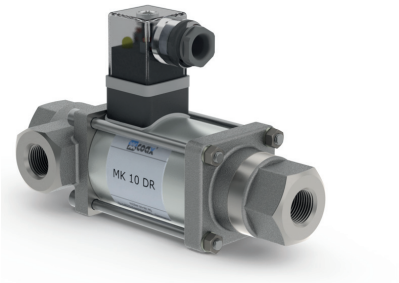

⚠ Above stated body materials refer to the valve port connections that get in contact with the media only!

details needed

- orifice
- port
- function NC/NO
- operating pressure
- inlet pressure at A, B or C
- flow rate
- media
- media temperature
- ambient temperature
- nominal voltage

⚠ The valves' technical design is based on media and application requirements. This can lead to deviations from the general specifications shown on the data sheet with regards to the design, sealing materials and characteristics.

⚠ If order or application specifications are incomplete or imprecise there exists a risk of an incorrect technical design of the valve for the required application. As a consequence, the physical and / or chemical properties of the materials or seals used, may not be suitable for the intended application. To avoid hydraulic shocks in pipelines, the flow velocities must be taken into account when designing valves for liquids.

3/2 way valve	**direct acting**	
pressure range	PN 0-25 bar	
orifice	DN 10 mm	
connection	thread	
function	valve normally closed (A ►B) symbol **NC**	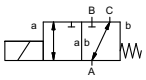
	valve normally open (A ►B) symbol **NO**	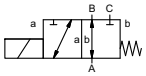
operating principle	pressure balanced, with spring return, intersecting switch-over	
body material	① brass	②
	③ brass, nickel plated	⑤
	④	⑥ stainless steel
	⓪ aluminium	
valve seat	synthetic materials on metal	
seal materials	NBR	FPM, CR, EPDM

	general specifications		**options**
ports	MK	threads G 1/4 - G 3/4	special threads
function		NC	NO
pressure range	bar	0-16 / 0-25	
		A ⇨ B max. 25 / B ⇨ A max. 16 / A ⇨ C max. 25 / C ⇨ A max. 25	
Kv value	m^3/h	2.6	
vacuum	leak rate		< 10^{-6} mbar•l•s^{-1}
pressure-vacuum	$P_1 \Leftrightarrow P_2$		upon request
back pressure	$P_2 > P_1$	see pressure range	
media		gaseous - liquid - contaminated	
abrasive media			
damping	opening		
	closing		
flow direction		see pressure range	
switching cycles	1/min	200	
switching time	ms	opening 40	
		closing 25	
media temperature	°C	DC: -10 to +80	-30 to +120
		AC: -10 to +80	-30 to +120
ambient temperature	°C	DC: -10 to +80	
		AC: -10 to +80	
limit switches			
manual override			
approvals			LR/DNV/WAZ
mounting			mounting brackets
weight	kg	MK 2.2	
additional equipment			upon request

	electrical specifications		**options**
nominal voltage	U_n	DC 24 V +5%/-10%	special voltage upon request
	U_n	AC 230 V +5%/-10% 40-60 Hz	special voltage upon request
actuation	DC	direct-current magnet	
	AC	direct-current magnet with integrated rectifier	
insulating rating	H	180°C	
protection	IP65		
energized duty rating	ED	100%	
connection		plug acc. DIN EN 175301-803 form A, 4 positions x90° / wire diameter 6-8 mm	terminal box M16x1,5
optional	M12x1	connector acc. DESINA	connector acc. VDMA
additional equipment		illuminated plug with varistor	
current consumption	N-coil	DC 24 V 1.04 A	
		AC 230 V 40-60 Hz 0.13 A	
	H-coil		DC 24 V 1.28 A
			AC 230 V 40-60 Hz 0.16 A
explosion proof			terminal box M16x1,5
			⟨Ex⟩ II 3G Ex ec IIC T3 Ta -20...+80°C Gc
			⟨Ex⟩ II 3D Ex tc IIIC T195°C Ta -20...+80°C Dc
			⟨Ex⟩ II 3G Ex h IIC T3 Gc
			⟨Ex⟩ II 3D Ex h IIIC T195°C Dc
limit switches			

specifications not highlighted are standard
specifications highlighted in grey are optional

müller co-ax gmbh • Friedrich-Müller-Str. 1 • 74670 Forchtenberg • Germany • fon +49(0)7947/828-0 • fax +49(0)7947/828-11 • Email info@co-ax.com

function: **NC**
closed when not energized (A ▶B)

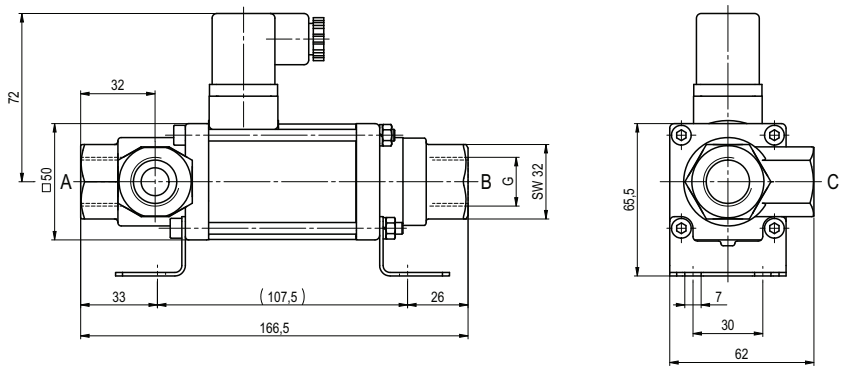

function: **NO**
open when not energized (A ▶B)

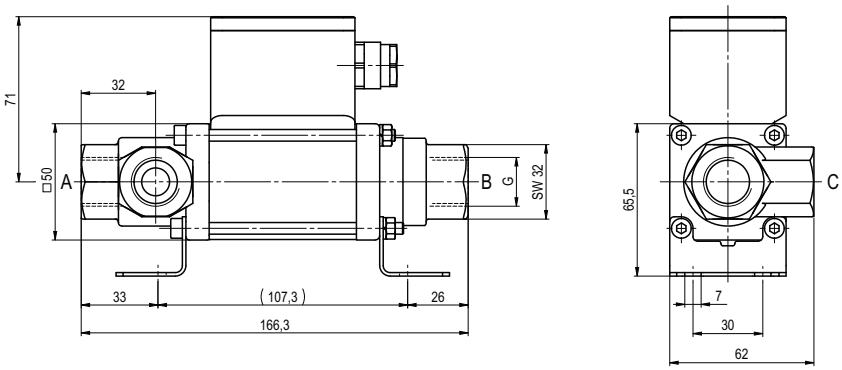

müller co-ax shall retain the rights to these documents. Modifications to the documents are strictly prohibited.
Rights reserved to make technical alterations • Not responsible for printing errors • Detailled drawings can be obtained upon request

coax® data sheet - coaxial valve

type MK 10 DR 40/100 bar

08/2022



⚠ Above stated body materials refer to the valve port connections that get in contact with the media only!

details needed

- orifice
- port
- function NC/NO
- operating pressure
- inlet pressure at A, B or C
- flow rate
- media
- media temperature
- ambient temperature
- nominal voltage

⚠ The valves' technical design is based on media and application requirements. This can lead to deviations from the general specifications shown on the data sheet with regards to the design, sealing materials and characteristics.

⚠ If order or application specifications are incomplete or imprecise there exists a risk of an incorrect technical design of the valve for the required application. As a consequence, the physical and / or chemical properties of the materials or seals used, may not be suitable for the intended application. To avoid hydraulic shocks in pipelines, the flow velocities must be taken into account when designing valves for liquids.

3/2 way valve	**direct acting**	
pressure range	PN 0-40 / 0-100 bar	
orifice	DN 10 / 8 mm	
connection	thread	
function	valve normally closed (A ►B) symbol **NC**	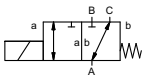
	valve normally open (A ►B) symbol **NO**	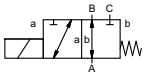
operating principle	pressure balanced, with spring return, intersecting switch-over	
body material	① brass	②
	③	⑤
	④	⑥ stainless steel
	⓪	
valve seat	synthetic materials on metal	
seal materials	NBR	PTFE, FPM, EPDM

	general specifications		**options**
ports	MK	threads G 1/4 - G 3/4	special threads
function		NC	NO
pressure range	bar	0-40 | 0-100	
		A ⇨ B max. 40|100 / B ⇨ A max. 25|75 / A ⇨ C max. 40|100 / C ⇨ A max. 25|75	
Kv value	m^3/h	2.2 | 1.4	
vacuum	leak rate		< 10^{-6} mbar•l•s^{-1}
pressure-vacuum	P_1⇔ P_2		upon request
back pressure	P_2 > P_1	see pressure range	
media		gaseous - liquid - contaminated	
abrasive media			
damping	opening		
	closing		
flow direction		see pressure range	
switching cycles	1/min	200	
switching time	ms	opening 135	
		closing 20	
media temperature	°C	DC: -10 to +80	-30 to +120
		AC: -10 to +80	-30 to +120
ambient temperature	°C	DC: -10 to +80	
		AC: -10 to +80	
limit switches			
manual override			
approvals			LR/DNV/WAZ
mounting			mounting brackets
weight	kg	MK 2.5	
additional equipment			upon request

	electrical specifications		**options**
nominal voltage	U_n	DC 24 V +5%/-10%	special voltage upon request
	U_n	AC 230 V +5%/-10% 40-60 Hz	special voltage upon request
actuation	DC	direct-current magnet	
	AC	direct-current magnet with integrated rectifier	
insulating rating	H	180°C	
protection	IP65		
energized duty rating	ED	100%	
connection		plug acc. DIN EN 175301-803 form A, 4 positions x90° / wire diameter 6-8 mm	terminal box M16x1,5
optional	M12x1	connector acc. DESINA	connector acc. VDMA
additional equipment		illuminated plug with varistor	
current consumption	N-coil	DC 24 V 1.33 A	
		AC 230 V 40-60 Hz 0.14 A	
explosion proof			terminal box M16x1,5
			⟨Ex⟩ II 3G Ex ec IIC T3 Ta -20...+80°C Gc
			⟨Ex⟩ II 3D Ex tc IIIC T195°C Ta -20...+80°C Dc
			⟨Ex⟩ II 3G Ex h IIC T3 Gc
			⟨Ex⟩ II 3D Ex h IIIC T195°C Dc
limit switches			

specifications not highlighted are standard
specifications highlighted in grey are optional

müller co-ax gmbh • Friedrich-Müller-Str. 1 • 74670 Forchtenberg • Germany • fon +49(0)7947/828-0 • fax +49(0)7947/828-11 • Email info@co-ax.com

coax® data sheet - coaxial valve

type MK 10 DR 40/100 bar

function: **NC**
closed when not energized (A ▶B)

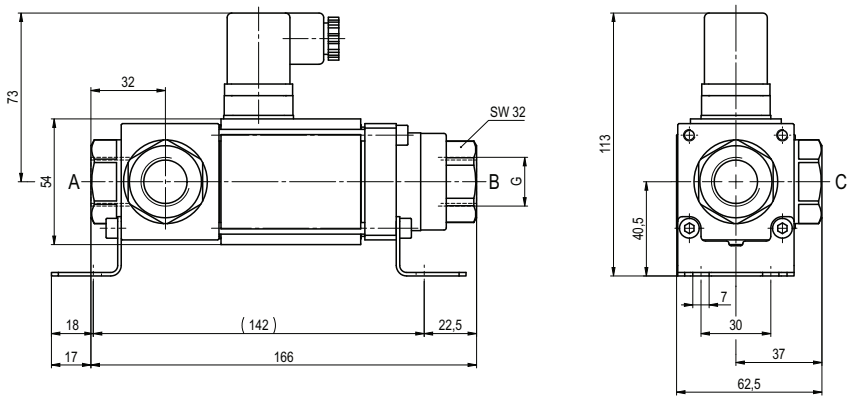

function: **NO**
open when not energized (A ▶B)

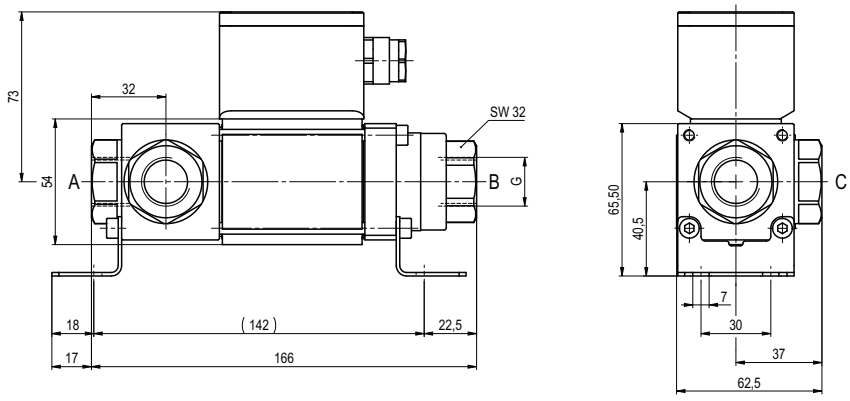

müller co-ax shall retain the rights to these documents. Modifications to the documents are strictly prohibited.
Rights reserved to make technical alterations • Not responsible for printing errors • Detailled drawings can be obtained upon request

coax® data sheet - coaxial valve

type MK 15 DR
FK 15 DR

08/2022



3/2 way valve	**direct acting**
pressure range	PN 0-40 bar
orifice	DN 15 mm
connection	thread/flange
function	valve normally closed (A ►B) symbol **NC**

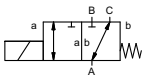

	valve normally open (A ►B) symbol **NO**

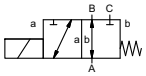

operating principle	pressure balanced, with spring return, intersecting switch-over
body material	① brass ③ brass, nickel plated ④ steel, nickel plated ② steel galvanized ⑤ without non-ferr. Metals ⑥ stainless steel
valve seat	synthetic materials on metal
seal materials	NBR PTFE, FPM, CR, EPDM

⚠ Above stated body materials refer to the valve port connections that get in contact with the media only!

details needed

- orifice
- port
- function NC/NO
- operating pressure
- inlet pressure at A, B or C
- flow rate
- media
- media temperature
- ambient temperature
- nominal voltage

	general specifications	options
ports	MK threads G 3/8 - G 3/4	special threads
	FK flanges PN 16 / 40	special flanges
function	NC	NO
pressure range	bar 0-16 / 0-40	
	A ⇨ B max. 40 / B ⇨ A max. 16 / A ⇨ C max. 40 / C ⇨ A max. 40	
Kv value	m^3/h 4.3	
vacuum	leak rate	< 10^{-6} mbar•l•s^{-1}
pressure-vacuum	P_1 ⇔ P_2	upon request
back pressure	P_2 > P_1 see pressure range	
media	gaseous - liquid - highly viscous - gelatinous - contaminated	
abrasive media		upon request
damping	opening	
	closing	
flow direction	see pressure range	
switching cycles	1/min 200	
switching time	ms opening 80	
	closing 80	
media temperature	°C DC: -20 to +80	-40 to +160
	AC: -20 to +80	-40 to +160
ambient temperature	°C DC: -20 to +80	
	AC: -20 to +80	
limit switches		inductive / mechanical
manual override		available
approvals		LR/DNV/WAZ
mounting		mounting brackets
weight	kg MK 4.3 FK 5.9	
additional equipment		upon request

⚠ The valves' technical design is based on media and application requirements. This can lead to deviations from the general specifications shown on the data sheet with regards to the design, sealing materials and characteristics.

	electrical specifications	options
nominal voltage	U_n DC 24 V +5%/-10%	special voltage upon request
	U_n AC 230 V +5%/-10% 40-60 Hz	special voltage upon request
actuation	DC direct-current magnet	
	AC direct-current magnet with integrated rectifier	above 100 °C with separate rectifier
insulating rating	H 180°C	
protection	IP65	
energized duty rating	ED 100%	
connection	plug acc. DIN EN 175301-803 form A, 4 positions x90° / wire diameter 6-8 mm	terminal box M16x1,5
optional	M12x1 connector acc. DESINA	connector acc. VDMA
additional equipment	illuminated plug with varistor	
current consumption	N-coil DC 24 V 1.67 A	
	AC 230 V 40-60 Hz 0.15 A	
	H-coil	DC 24 V 2.29 A
		AC 230 V 40-60 Hz 0.24 A
explosion proof		terminal box M16x1,5
		⟨Ex⟩ II 3G Ex ec IIC T3 Ta -20...+80°C Gc
		⟨Ex⟩ II 3D Ex tc IIIC T195°C Ta -20...+80°C Dc
		⟨Ex⟩ II 3G Ex h IIC T3 Gc
		⟨Ex⟩ II 3D Ex h IIIC T195°C Dc
limit switches	inductive (I)	normally open-PNP
	inductive (B)	normally open-PNP
	mechanical	single pole double throw-SPDT

⚠ If order or application specifications are incomplete or imprecise there exists a risk of an incorrect technical design of the valve for the required application. As a consequence, the physical and / or chemical properties of the materials or seals used, may not be suitable for the intended application. To avoid hydraulic shocks in pipelines, the flow velocities must be taken into account when designing valves for liquids.

specifications not highlighted are standard
specifications highlighted in grey are optional

müller co-ax gmbh • Friedrich-Müller-Str. 1 • 74670 Forchtenberg • Germany • fon +49(0)7947/828-0 • fax +49(0)7947/828-11 • Email info@co-ax.com

coax® data sheet - coaxial valve

type MK 15 DR
FK 15 DR

function: **NC**
closed when not energized (A ▶B)

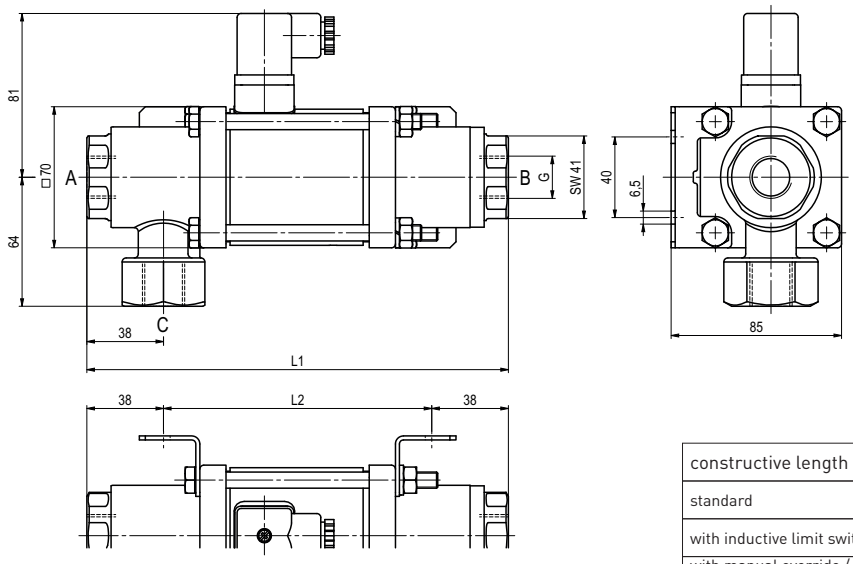

constructive length	L1	L2	L3
standard	209	133	265
with inductive limit switches	249	173	305
with manual override / inductive limit switches	249	173	305
with mechanical limit switches	249	173	305

flanges PN	DIN	ØD	Øk	Ød
16	EN 1092-1	95	65	14
40	EN 1092-2	95	65	14

function: **NO**
open when not energized (A ▶B)

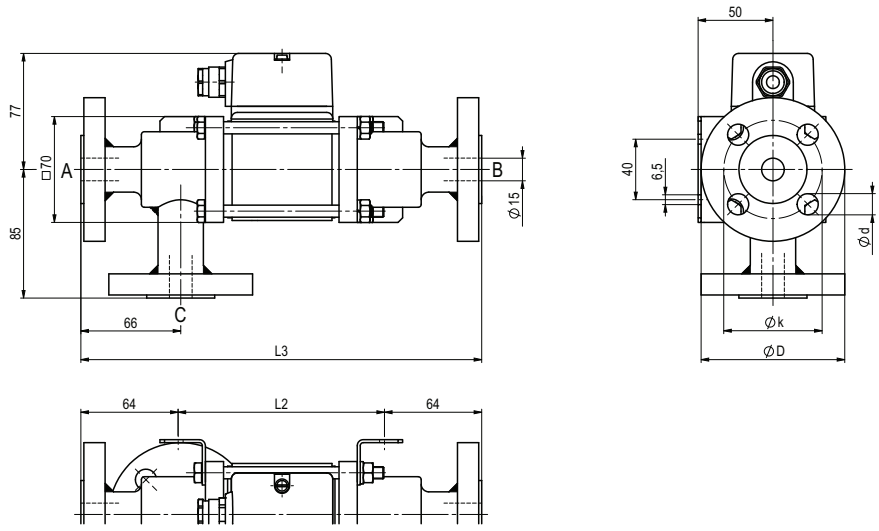

müller co-ax shall retain the rights to these documents. Modifications to the documents are strictly prohibited.
Rights reserved to make technical alterations • Not responsible for printing errors • Detailled drawings can be obtained upon request

coax® data sheet - coaxial valve

type MK 20 DR
FK 20 DR

08/2022



3/2 way valve	**direct acting**
pressure range	PN 0-40 bar
orifice	DN 20 mm
connection	thread/flange
function	valve normally closed (A ►B) symbol **NC**

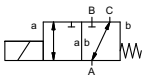

	valve normally open (A ►B) symbol **NO**

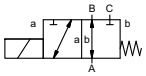

operating principle	pressure balanced, with spring return, intersecting switch-over
body material	① brass ③ brass, nickel plated ④ steel, nickel plated ② steel galvanized ⑤ without non-ferr. Metals ⑥ stainless steel
valve seat	synthetic materials on metal
seal materials	NBR PTFE, FPM, CR, EPDM

⚠ Above stated body materials refer to the valve port connections that get in contact with the media only!

details needed

- orifice
- port
- function NC/NO
- operating pressure
- inlet pressure at A, B or C
- flow rate
- media
- media temperature
- ambient temperature
- nominal voltage

	general specifications	options
ports	MK threads G 3/4 - G 1 1/4	special threads
	FK flanges PN 16 / 40	special flanges
function	NC	NO
pressure range	bar 0-16 / 0-40	
	A ⇨ B max. 40 / B ⇨ A max. 16 / A ⇨ C max. 40 / C ⇨ A max. 40	
Kv value	m^3/h 6.7	
vacuum	leak rate	< 10^{-6} mbar•l•s^{-1}
pressure-vacuum	P_1 ⇔ P_2	upon request
back pressure	P_2 > P_1 see pressure range	
media	gaseous - liquid - highly viscous - gelatinous - contaminated	
abrasive media		upon request
damping	opening closing	
flow direction	see pressure range	
switching cycles	1/min 150	
switching time	ms opening 110	
	closing 110	
media temperature	°C DC: -20 to +80	-40 to +160
	AC: -20 to +80	-40 to +160
ambient temperature	°C DC: -20 to +80	
	AC: -20 to +80	
limit switches		inductive / mechanical
manual override		available
approvals		LR/DNV/WAZ
mounting		mounting brackets
weight	kg MK 6.0 FK 8.4	
additional equipment		upon request

⚠ The valves' technical design is based on media and application requirements. This can lead to deviations from the general specifications shown on the data sheet with regards to the design, sealing materials and characteristics.

	electrical specifications	options
nominal voltage	U_n DC 24 V +5%/-10%	special voltage upon request
	U_n AC 230 V +5%/-10% 40-60 Hz	special voltage upon request
actuation	DC direct-current magnet	
	AC direct-current magnet with integrated rectifier	above 100 °C with separate rectifier
insulating rating	H 180°C	
protection	IP65	
energized duty rating	ED 100%	
connection	plug acc. DIN EN 175301-803 form A, 4 positions x90° / wire diameter 6-8 mm	terminal box M16x1,5
optional	M12x1 connector acc. DESINA	connector acc. VDMA
additional equipment	illuminated plug with varistor	
current consumption	N-coil DC 24 V 1.56 A	
	AC 230 V 40-60 Hz 0.16 A	
	H-coil	DC 24 V 2.24 A
		AC 230 V 40-60 Hz 0.28 A
explosion proof		terminal box M16x1,5
		⟨Ex⟩ II 3G Ex ec IIC T3 Ta -20...+80°C Gc
		⟨Ex⟩ II 3D Ex tc IIIC T195°C Ta -20...+80°C Dc
		⟨Ex⟩ II 3G Ex h IIC T3 Gc
		⟨Ex⟩ II 3D Ex h IIIC T195°C Dc
limit switches	inductive (I)	normally open-PNP
	inductive (B)	normally open-PNP
	mechanical	single pole double throw-SPDT

⚠ If order or application specifications are incomplete or imprecise there exists a risk of an incorrect technical design of the valve for the required application. As a consequence, the physical and / or chemical properties of the materials or seals used, may not be suitable for the intended application. To avoid hydraulic shocks in pipelines, the flow velocities must be taken into account when designing valves for liquids.

specifications not highlighted are standard
specifications highlighted in grey are optional

müller co-ax gmbh • Friedrich-Müller-Str. 1 • 74670 Forchtenberg • Germany • fon +49(0)7947/828-0 • fax +49(0)7947/828-11 • Email info@co-ax.com

coax® data sheet - coaxial valve

type MK 20 DR
FK 20 DR

function: **NC**
closed when not energized (A ▶B)

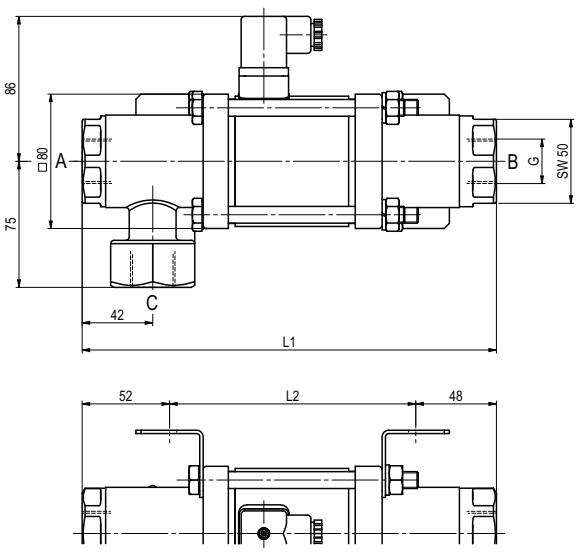

constructive length	L1	L2	L3
standard	247	148	301
with inductive limit switches	291	192	345
with manual override / inductive limit switches	291	192	345
with mechanical limit switches	291	192	345

flanges PN	DIN	ØD	Øk	Ød
16	EN 1092-1	105	75	14
40	EN 1092-2	105	75	14

function: **NO**
open when not energized (A ▶B)

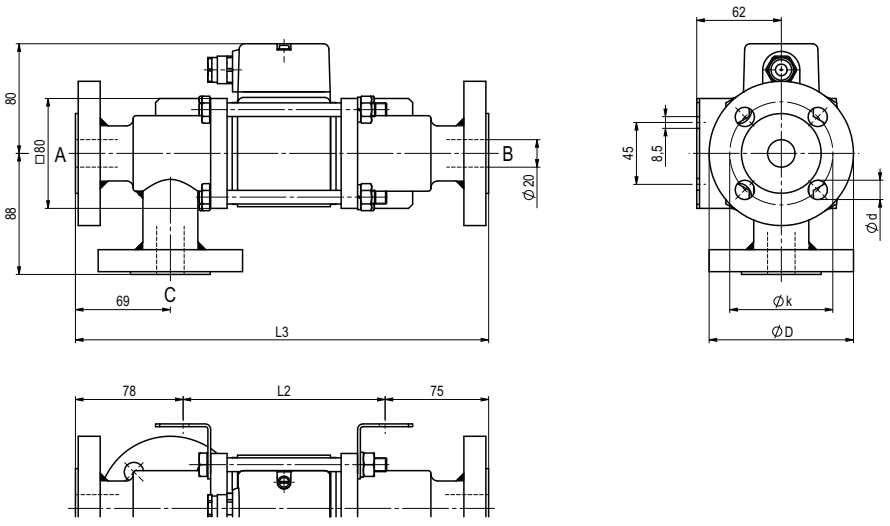

müller co-ax shall retain the rights to these documents. Modifications to the documents are strictly prohibited.
Rights reserved to make technical alterations • Not responsible for printing errors • Detailled drawings can be obtained upon request

coax® data sheet - coaxial valve

type MK 25 DR
FK 25 DR

08/2022



⚠ Above stated body materials refer to the valve port connections that get in contact with the media only!

details needed

- orifice
- port
- function NC/NO
- operating pressure
- inlet pressure at A, B or C
- flow rate
- media
- media temperature
- ambient temperature
- nominal voltage

⚠ The valves' technical design is based on media and application requirements. This can lead to deviations from the general specifications shown on the data sheet with regards to the design, sealing materials and characteristics.

⚠ If order or application specifications are incomplete or imprecise there exists a risk of an incorrect technical design of the valve for the required application. As a consequence, the physical and / or chemical properties of the materials or seals used, may not be suitable for the intended application. To avoid hydraulic shocks in pipelines, the flow velocities must be taken into account when designing valves for liquids.

3/2 way valve	**direct acting**	
pressure range	PN 0-40 bar	
orifice	DN 25 mm	
connection	thread/flange	
function	valve normally closed (A ►B) symbol **NC**	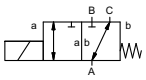
	valve normally open (A ►B) symbol **NO**	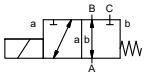
operating principle	pressure balanced, with spring return, intersecting switch-over	
body material	① brass	② steel galvanized
	③ brass, nickel plated	⑤ without non-ferr. Metals
	④ steel, nickel plated	⑥ stainless steel
valve seat	synthetic materials on metal	
seal materials	NBR	PTFE, FPM, CR, EPDM

	general specifications		**options**
ports	MK	threads G 1 - G 1 1/2	special threads
	FK	flanges PN 16 / 40	special flanges
function		NC	NO
pressure range	bar	0-16 / 0-40	
		A ⇨ B max. 40 / B ⇨ A max. 16 / A ⇨ C max. 40 / C ⇨ A max. 40	
Kv value	m^3/h	11.2	
vacuum	leak rate		< 10^{-6} mbar•l•s^{-1}
pressure-vacuum	P_1⇔ P_2		upon request
back pressure	P_2 > P_1	see pressure range	
media		gaseous - liquid - highly viscous - gelatinous - contaminated	
abrasive media			upon request
damping	opening closing		
flow direction		see pressure range	
switching cycles	1/min	130	
switching time	ms	opening 130 closing 130	
media temperature	°C	DC: -20 to +80	-40 to +160
		AC: -20 to +80	-40 to +160
ambient temperature	°C	DC: -20 to +80 AC: -20 to +80	
limit switches			inductive / mechanical
manual override			available
approvals			LR/DNV/WAZ
mounting			mounting brackets
weight	kg	MK 9.2 FK 12.0	
additional equipment			upon request

	electrical specifications		**options**
nominal voltage	U_n	DC 24 V +5%/-10%	special voltage upon request
	U_n	AC 230 V +5%/-10% 40-60 Hz	special voltage upon request
actuation	DC	direct-current magnet	
	AC	direct-current magnet with integrated rectifier	above 100 °C with separate rectifier
insulating rating	H	180°C	
protection	IP65		
energized duty rating	ED	100%	
connection		plug acc. DIN EN 175301-803 form A, 4 positions x90° / wire diameter 6-8 mm	terminal box M16x1,5
optional	M12x1	connector acc. DESINA	connector acc. VDMA
additional equipment		illuminated plug with varistor	
current consumption	N-coil	DC 24 V 2.70 A	
		AC 230 V 40-60 Hz 0.36 A	
	H-coil		DC 24 V 2.70 A
			AC 230 V 40-60 Hz 0.36 A
explosion proof			terminal box M16x1,5
			⟨Ex⟩ II 3G Ex ec IIC T3 Ta -20...+80°C Gc
			⟨Ex⟩ II 3D Ex tc IIIC T195°C Ta -20...+80°C Dc
			⟨Ex⟩ II 3G Ex h IIC T3 Gc
			⟨Ex⟩ II 3D Ex h IIIC T195°C Dc
limit switches		inductive (I)	normally open-PNP
		inductive (B)	normally open-PNP
		mechanical	single pole double throw-SPDT

specifications not highlighted are standard
specifications highlighted in grey are optional

müller co-ax gmbh • Friedrich-Müller-Str. 1 • 74670 Forchtenberg • Germany • fon +49(0)7947/828-0 • fax +49(0)7947/828-11 • Email info@co-ax.com

coax® data sheet - coaxial valve

type MK 25 DR
FK 25 DR

function: **NC**
closed when not energized (A ▶B)

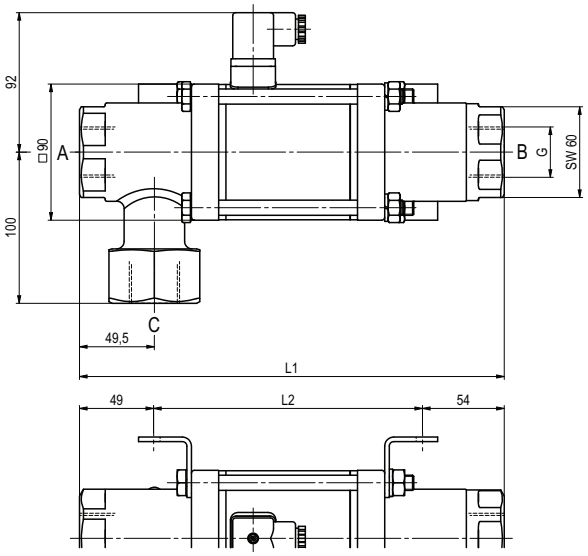

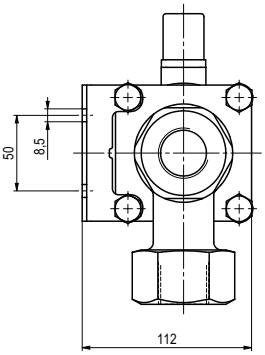

constructive length	L1	L2	L3
standard	281	178	337
with inductive limit switches	322	219	378
with manual override / inductive limit switches	334	231	390
with mechanical limit switches	322	219	378

flanges PN	DIN	ØD	Øk	Ød
16	EN 1092-1	115	85	14
40	EN 1092-2	115	85	14

function: **NO**
open when not energized (A ▶B)

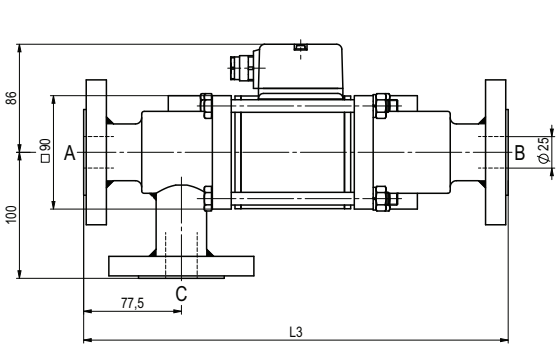

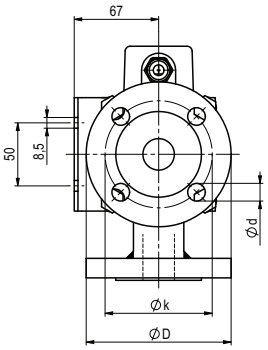

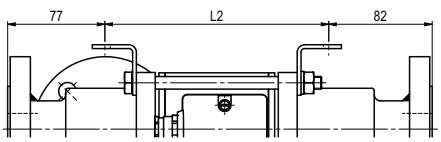

müller co-ax shall retain the rights to these documents. Modifications to the documents are strictly prohibited.
Rights reserved to make technical alterations • Not responsible for printing errors • Detailled drawings can be obtained upon request

coax® data sheet - coaxial valve

type MK 32 DR
FK 32 DR

08/2022



3/2 way valve	**direct acting**
pressure range	PN 0-40 bar
orifice	DN 32 mm
connection	thread/flange
function	valve normally closed (A ►B) symbol **NC**

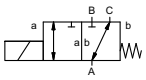

	valve normally open (A ►B) symbol **NO**

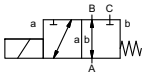

operating principle	pressure balanced, with spring return, intersecting switch-over
body material	① ② steel galvanized ③ ⑤ without non-ferr. Metals ④ steel, nickel plated ⑥ stainless steel
valve seat	synthetic materials on metal
seal materials	NBR PTFE, FPM, CR, EPDM

⚠ Above stated body materials refer to the valve port connections that get in contact with the media only!

details needed

- orifice
- port
- function NC/NO
- operating pressure
- inlet pressure at A, B or C
- flow rate
- media
- media temperature
- ambient temperature
- nominal voltage

	general specifications	options
ports	MK threads G 1 1/4 - G 1 1/2	special threads
	FK flanges PN 16 / 40	special flanges
function	NC	NO
pressure range	bar 0-16 / 0-40	
	A ⇨ B max. 40 / B ⇨ A max. 16 / A ⇨ C max. 40 / C ⇨ A max. 16	
Kv value	m^3/h 14.1 [A ⇨ B] 8.9 [A ⇨ C]	
vacuum	leak rate	< 10^{-6} mbar•l•s^{-1}
pressure-vacuum	P_1 ⇔ P_2	upon request
back pressure	P_2 > P_1 see pressure range	
media	gaseous - liquid - highly viscous - gelatinous - contaminated	
abrasive media		upon request
damping	opening	
	closing	
flow direction	see pressure range	
switching cycles	1/min 120	
switching time	ms opening 440	
	closing 250	
media temperature	°C DC: -20 to +100	-40 to +160
	AC: -20 to +100	-40 to +160
ambient temperature	°C DC: -20 to +80	
	AC: -20 to +80	
limit switches		inductive / mechanical
manual override		available
approvals		LR/DNV/WAZ
mounting		mounting brackets
weight	kg MK 18.0 FK 22.0	
additional equipment		upon request

⚠ The valves' technical design is based on media and application requirements. This can lead to deviations from the general specifications shown on the data sheet with regards to the design, sealing materials and characteristics.

	electrical specifications	options
nominal voltage	U_n DC 24 V +5%/-10%	special voltage upon request
	U_n AC 230 V +5%/-10% 40-60 Hz	special voltage upon request
actuation	DC direct-current magnet	
	AC direct-current magnet with integrated rectifier	above 100 °C with separate rectifier
insulating rating	H 180°C	
protection	IP65	
energized duty rating	ED 100%	
connection	plug acc. DIN EN 175301-803 form A, 4 positions x90° / wire diameter 6-8 mm	terminal box M16x1,5
optional		
additional equipment	illuminated plug with varistor	
current consumption	N-coil DC 24 V 2.07 A	
	AC 230 V 40-60 Hz 0.28 A	
	H-coil	DC 24 V 3.24 A
		AC 230 V 40-60 Hz 0.44 A
explosion proof		terminal box M16x1,5
		⟨Ex⟩ II 3G Ex ec IIC T3 Ta -20...+80°C Gc
		⟨Ex⟩ II 3D Ex tc IIIC T195°C Ta -20...+80°C Dc
		⟨Ex⟩ II 3G Ex h IIC T3 Gc
		⟨Ex⟩ II 3D Ex h IIIC T195°C Dc
limit switches	inductive (I)	normally open-PNP
	inductive (B)	normally open-PNP
	mechanical	single pole double throw-SPDT

⚠ If order or application specifications are incomplete or imprecise there exists a risk of an incorrect technical design of the valve for the required application. As a consequence, the physical and / or chemical properties of the materials or seals used, may not be suitable for the intended application. To avoid hydraulic shocks in pipelines, the flow velocities must be taken into account when designing valves for liquids.

specifications not highlighted are standard
specifications highlighted in grey are optional

müller co-ax gmbh • Friedrich-Müller-Str. 1 • 74670 Forchtenberg • Germany • fon +49(0)7947/828-0 • fax +49(0)7947/828-11 • Email info@co-ax.com

coax® data sheet - coaxial valve

type MK 32 DR
FK 32 DR

function: **NC**
closed when not energized (A ▶B)

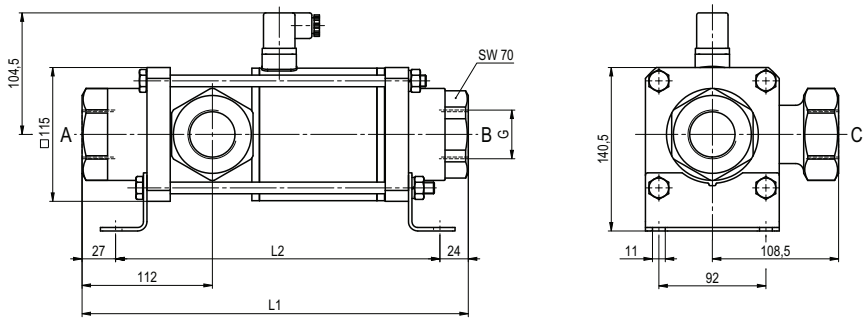

constructive length	L1	L2	L3
standard	332	281	394
with inductive limit switches	373	322	435
with manual override / inductive limit switches	373	322	435
with mechanical limit switches	373	322	435

flanges PN	DIN	ØD	Øk	Ød
16	EN 1092-1	140	100	18
40	EN 1092-2	140	100	18

function: **NO**
open when not energized (A ▶B)

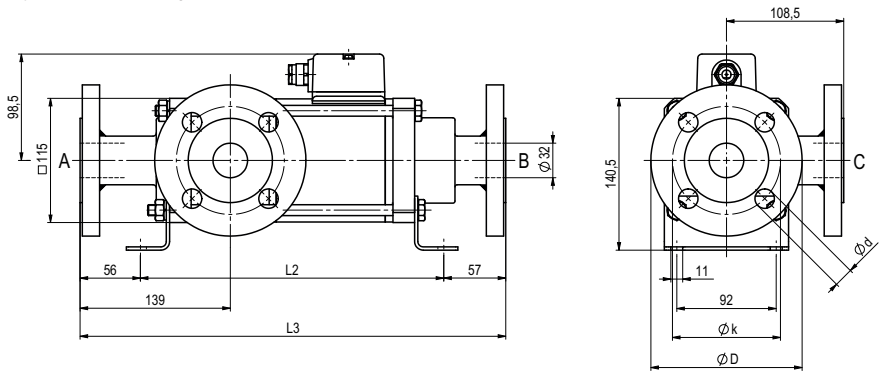

müller co-ax shall retain the rights to these documents. Modifications to the documents are strictly prohibited.
Rights reserved to make technical alterations • Not responsible for printing errors • Detailled drawings can be obtained upon request

coax® data sheet - coaxial valve

type MK 40 DR
FK 40 DR

08/2022



3/2 way valve	**direct acting**
pressure range	PN 0-16 bar
orifice	DN 40 mm
connection	thread/flange
function	valve normally closed (A ►B) symbol **NC**

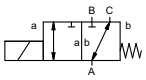

valve
normally open (A ►B)
symbol **NO**

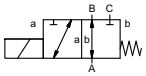

operating principle	pressure balanced, with spring return, intersecting switch-over
body material	① ② steel galvanized ③ ⑤ without non-ferr. Metals ④ steel, nickel plated ⑥ stainless steel
valve seat	synthetic materials on metal
seal materials	NBR PTFE, FPM, CR, EPDM

⚠ Above stated body materials refer to the valve port connections that get in contact with the media only!

details needed

- orifice
- port
- function NC/NO
- operating pressure
- inlet pressure at A, B or C
- flow rate
- media
- media temperature
- ambient temperature
- nominal voltage

	general specifications		options
ports	MK	threads G 1 1/2 - G 2	special threads
	FK	flanges PN 16	special flanges
function		NC	NO
pressure range	bar	0-16	
		A ⇨ B max. 16 / B ⇨ A max. 16 / A ⇨ C max. 16 / C ⇨ A max. 16	
Kv value	m^3/h	18.4 [A ⇨ B] 11.5 [A ⇨ C]	
vacuum	leak rate		< 10^{-6} mbar•l•s^{-1}
pressure-vacuum	P_1⇔ P_2		upon request
back pressure	P_2 > P_1	see pressure range	
media		gaseous - liquid - highly viscous - gelatinous - contaminated	
abrasive media			upon request
damping	opening closing		
flow direction		see pressure range	
switching cycles	1/min	90	
switching time	ms	opening 520 closing 150	
media temperature	°C	DC: -20 to +100	-40 to +160
		AC: -20 to +100	-40 to +160
ambient temperature	°C	DC: -20 to +80 AC: -20 to +80	
limit switches			inductive / mechanical
manual override			available
approvals			LR/DNV/WAZ
mounting			mounting brackets
weight	kg	MK 18.5 FK 23.0	
additional equipment			upon request

⚠ The valves' technical design is based on media and application requirements. This can lead to deviations from the general specifications shown on the data sheet with regards to the design, sealing materials and characteristics.

	electrical specifications		options
nominal voltage	U_n	DC 24 V +5%/-10%	special voltage upon request
	U_n	AC 230 V +5%/-10% 40-60 Hz	special voltage upon request
actuation	DC	direct-current magnet	
	AC	direct-current magnet with integrated rectifier	above 100 °C with separate rectifier
insulating rating	H	180°C	
protection	IP65		
energized duty rating	ED	100%	
connection		plug acc. DIN EN 175301-803 form A, 4 positions x90° / wire diameter 6-8 mm	terminal box M16x1,5
optional			
additional equipment		illuminated plug with varistor	
current consumption	N-coil	DC 24 V 2.07 A	
		AC 230 V 40-60 Hz 0.28 A	
	H-coil		DC 24 V 3.24 A
			AC 230 V 40-60 Hz 0.44 A
explosion proof			terminal box M16x1,5
			⟨Ex⟩ II 3G Ex ec IIC T3 Ta -20...+80°C Gc
			⟨Ex⟩ II 3D Ex tc IIIC T195°C Ta -20...+80°C Dc
			⟨Ex⟩ II 3G Ex h IIC T3 Gc
			⟨Ex⟩ II 3D Ex h IIIC T195°C Dc
limit switches		inductive (I)	normally open-PNP
		inductive (B)	normally open-PNP
		mechanical	single pole double throw-SPDT

⚠ If order or application specifications are incomplete or imprecise there exists a risk of an incorrect technical design of the valve for the required application. As a consequence, the physical and / or chemical properties of the materials or seals used, may not be suitable for the intended application. To avoid hydraulic shocks in pipelines, the flow velocities must be taken into account when designing valves for liquids.

specifications not highlighted are standard
specifications highlighted in grey are optional

müller co-ax gmbh • Friedrich-Müller-Str. 1 • 74670 Forchtenberg • Germany • fon +49(0)7947/828-0 • fax +49(0)7947/828-11 • Email info@co-ax.com

coax® data sheet - coaxial valve

type MK 40 DR
FK 40 DR

function: **NC**
closed when not energized (A ▶B)

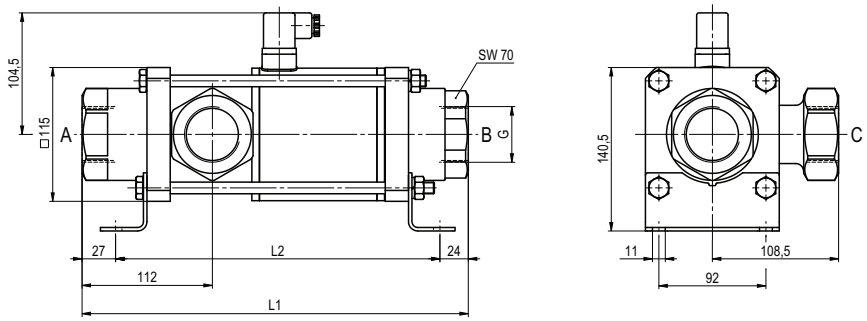

constructive length	L1	L2	L3
standard	332	281	394
with inductive limit switches	373	322	435
with manual override / inductive limit switches	373	322	435
with mechanical limit switches	373	322	435

flanges PN	DIN	ØD	Øk	Ød
16	EN 1092-1	150	110	18

function: **NO**
open when not energized (A ▶B)

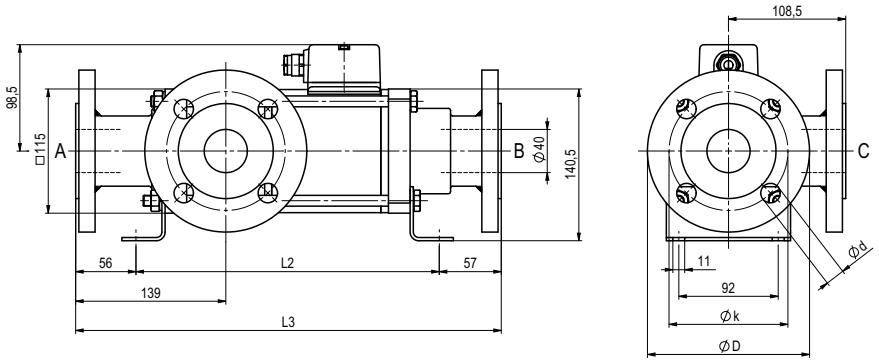

müller co-ax shall retain the rights to these documents. Modifications to the documents are strictly prohibited.
Rights reserved to make technical alterations • Not responsible for printing errors • Detailled drawings can be obtained upon request

coax® data sheet - coaxial valve

type MK 50 DR
FK 50 DR

08/2022



3/2 way valve	**direct acting**
pressure range	PN 0-16 bar
orifice	DN 50 mm
connection	thread/flange
function	valve normally closed (A ►B) symbol **NC**

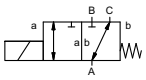

	valve normally open (A ►B) symbol **NO**

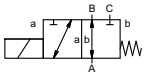

operating principle	pressure balanced, with spring return, intersecting switch-over
body material	① ② steel galvanized ③ ⑤ without non-ferr. Metals ④ steel, nickel plated ⑥ stainless steel
valve seat	synthetic materials on metal
seal materials	NBR PTFE, FPM, CR, EPDM

⚠ Above stated body materials refer to the valve port connections that get in contact with the media only!

details needed

- orifice
- port
- function NC/NO
- operating pressure
- inlet pressure at A, B or C
- flow rate
- media
- media temperature
- ambient temperature
- nominal voltage

	general specifications		options
ports	MK	threads G 2	special threads
	FK	flanges PN 16	special flanges
function		NC	NO
pressure range	bar	0-16 A ⇨ B max. 16 / B ⇨ A max. 10 / A ⇨ C max. 16 / C ⇨ A max. 16	
Kv value	m^3/h	28.2	
vacuum	leak rate		< 10^{-6} mbar•l•s^{-1}
pressure-vacuum	$P_1 \Leftrightarrow P_2$		upon request
back pressure	$P_2 > P_1$	see pressure range	
media		gaseous - liquid - highly viscous - gelatinous - contaminated	
abrasive media			upon request
damping	opening closing		
flow direction		see pressure range	
switching cycles	1/min	40	
switching time	ms	opening 400 closing 400	
media temperature	°C	DC: -20 to +80 AC: -20 to +80	-20 to +120 -20 to +120
ambient temperature	°C	DC: -20 to +80 AC: -20 to +80	
limit switches			inductive
manual override			available
approvals			LR/DNV/WAZ
mounting			mounting brackets
weight	kg	MK 31.5 FK 38.5	
additional equipment			upon request

⚠ The valves' technical design is based on media and application requirements. This can lead to deviations from the general specifications shown on the data sheet with regards to the design, sealing materials and characteristics.

	electrical specifications		options
nominal voltage	U_n	DC 24 V +5%/-10%	special voltage upon request
	U_n	AC 230 V +5%/-10% 40-60 Hz	special voltage upon request
actuation	DC	direct-current magnet	
	AC	direct-current magnet with integrated rectifier	above 100 °C with separate rectifier
insulating rating	H	180°C	
protection	IP65		
energized duty rating	ED	100%	
connection		plug acc. DIN EN 175301-803 form A, 4 positions x90° / wire diameter 6-8 mm	terminal box M16x1,5
optional			
additional equipment		illuminated plug with varistor	
current consumption	N-coil	DC 24 V 2.55 A AC 230 V 40-60 Hz 0.29 A	
	H-coil		DC 24 V 3.29 A AC 230 V 40-60 Hz 0.43 A
explosion proof			terminal box M16x1,5 Ⓔx II 3G Ex ec IIC T3 Ta -20...+80°C Gc Ⓔx II 3D Ex tc IIIC T195°C Ta -20...+80°C Dc Ⓔx II 3G Ex h IIC T3 Gc Ⓔx II 3D Ex h IIIC T195°C Dc
limit switches		inductive (I) inductive (B)	normally open-PNP normally open-PNP

⚠ If order or application specifications are incomplete or imprecise there exists a risk of an incorrect technical design of the valve for the required application. As a consequence, the physical and / or chemical properties of the materials or seals used, may not be suitable for the intended application. To avoid hydraulic shocks in pipelines, the flow velocities must be taken into account when designing valves for liquids.

specifications not highlighted are standard
specifications highlighted in grey are optional

müller co-ax gmbh • Friedrich-Müller-Str. 1 • 74670 Forchtenberg • Germany • fon +49(0)7947/828-0 • fax +49(0)7947/828-11 • Email info@co-ax.com

coax® data sheet - coaxial valve

type MK 50 DR
FK 50 DR

function: **NC**
closed when not energized (A ▶B)

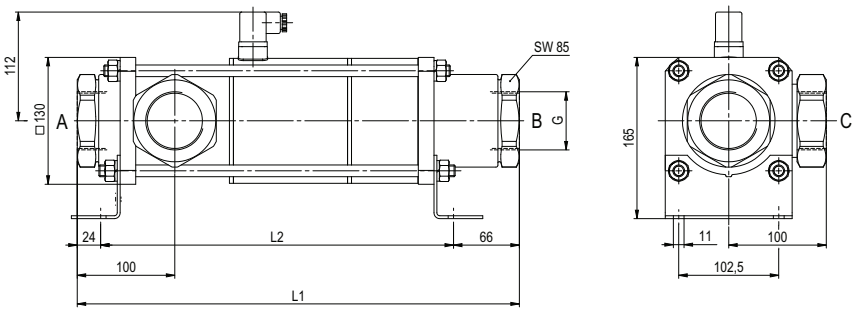

constructive length	L1	L2	L3
standard	453	363	553
with inductive limit switches	453	363	553
with manual override / inductive limit switches	453	363	553

flanges PN	DIN	ØD	Øk	Ød
16	EN 1092-1	165	125	18

function: **NO**
open when not energized (A ▶B)

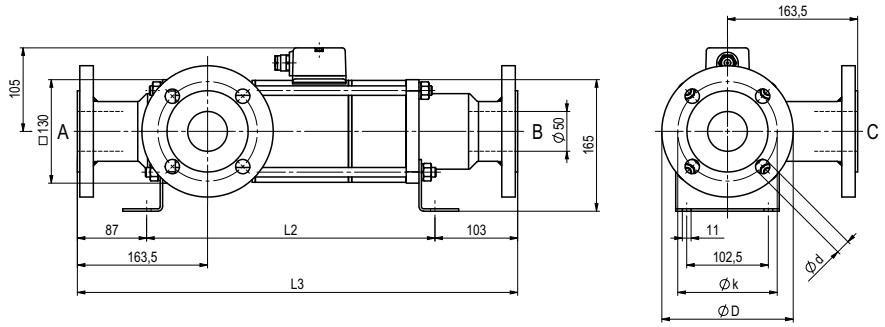

müller co-ax shall retain the rights to these documents. Modifications to the documents are strictly prohibited.
Rights reserved to make technical alterations • Not responsible for printing errors • Detailled drawings can be obtained upon request

coax® data sheet - coaxial valve

type FK 65 DR

09/2026



⚠ Above stated body materials refer to the valve port connections that get in contact with the media only!

details needed

- orifice
- port
- function NC/NO
- operating pressure
- inlet pressure at A, B or C
- flow rate
- media
- media temperature
- ambient temperature
- nominal voltage

⚠ The valves' technical design is based on media and application requirements. This can lead to deviations from the general specifications shown on the data sheet with regards to the design, sealing materials and characteristics.

⚠ If order or application specifications are incomplete or imprecise there exists a risk of an incorrect technical design of the valve for the required application. As a consequence, the physical and / or chemical properties of the materials or seals used, may not be suitable for the intended application. To avoid hydraulic shocks in pipelines, the flow velocities must be taken into account when designing valves for liquids.

3/2 way valve	**direct acting**	
pressure range	PN 0-16 bar	
orifice	DN 65 mm	
connection	flange	
function	valve normally closed (A ►B) symbol **NC**	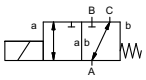
	valve normally open (A ►B) symbol **NO**	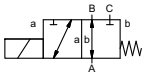
operating principle	pressure balanced, with spring return, intersecting switch-over	
body material	⓪	② steel galvanized
	③	⑤
	④ steel, nickel plated	⑥ stainless steel
valve seat	synthetic materials on metal	
seal materials	NBR	PTFE, FPM, EPDM

	general specifications		**options**
ports	FK	flanges PN 16	special flanges
function		NC	NO
pressure range	bar	0-16 A ⇨ B max. 16 / B ⇨ A max. 5 / A ⇨ C max. 16 / C ⇨ A max. 16	
Kv value	m^3/h	40,0	
vacuum	leak rate		< 10^{-4} mbar•l•s^{-1}
pressure-vacuum	$P_1 \Leftrightarrow P_2$		upon request
back pressure	$P_2 > P_1$	see pressure range	
media		gaseous - liquid - highly viscous - gelatinous - contaminated	
abrasive media			upon request
damping	opening closing		
flow direction		see pressure range	
switching cycles	1/min	20	
switching time	ms	opening 600 closing 800	
media temperature	°C	DC: -20 to +80 AC: -20 to +80	
ambient temperature	°C	DC: -20 to +80 AC: -20 to +80	
limit switches			inductive
manual override			
approvals			LR/DNV/WAZ
mounting			
weight	kg	FK 47,6	
additional equipment			upon request

	electrical specifications		**options**
nominal voltage	U_n	DC 24 V +5%/-10%	special voltage upon request
	U_n	AC 230 V +5%/-10% 40-60 Hz	special voltage upon request
actuation	DC	direct-current magnet	
	AC	direct-current magnet with integrated rectifier	
insulating rating	H	180°C	
protection	IP65		
energized duty rating	ED	100%	
connection		plug acc. DIN EN 175301-803 form A, 4 positions x90° / wire diameter 6-8 mm	terminal box M16x1,5
optional			
additional equipment		illuminated plug with varistor	
current draw	N-coil	DC 24 V 4,36 A AC 230 V 40-60 Hz 0,63 A	
	H-coil		
			AC 230 V 40-60 Hz 0,76 A
explosion proof			terminal box M16x1,5
			Ⓔx II 3G Ex ec IIC T3 Ta -20...+80°C Gc
			Ⓔx II 3D Ex tc IIIC T195°C Ta -20...+80°C Dc
			Ⓔx II 3G Ex h IIC T3 Gc
			Ⓔx II 3D Ex h IIIC T195°C Dc
limit switches		inductive (I)	normally open-PNP
		inductive (B)	normally open-PNP

specifications not highlighted are standard
specifications highlighted in grey are optional

müller co-ax gmbh • Friedrich-Müller-Str. 1 • 74670 Forchtenberg • Germany • fon +49(0)7947/828-0 • fax +49(0)7947/828-11 • Email info@co-ax.com

coax® data sheet - coaxial valve

type FK 65 DR

function: **NC**
closed when not energized (A ▶B)

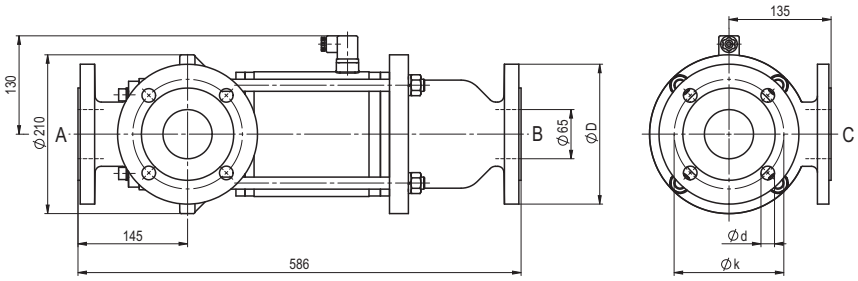

flanges PN	DIN	ØD	Øk	Ød
16	EN 1092-1	185	145	18

function: **NO**
open when not energized (A ▶B)

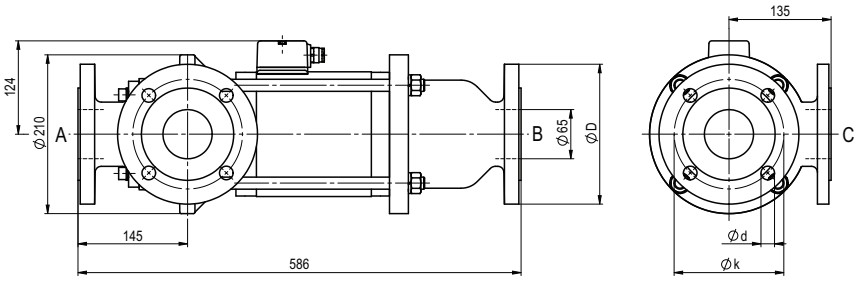

müller co-ax shall retain the rights to these documents. Modifications to the documents are strictly prohibited.
Rights reserved to make technical alterations • Not responsible for printing errors • Detailed drawings can be obtained upon request

coax® data sheet - coaxial valve

type FK 80 DR

09/2026



⚠ Above stated body materials refer to the valve port connections that get in contact with the media only!

details needed

- orifice
- port
- function NC/NO
- operating pressure
- inlet pressure at A, B or C
- flow rate
- media
- media temperature
- ambient temperature
- nominal voltage

⚠ The valves' technical design is based on media and application requirements. This can lead to deviations from the general specifications shown on the data sheet with regards to the design, sealing materials and characteristics.

⚠ If order or application specifications are incomplete or imprecise there exists a risk of an incorrect technical design of the valve for the required application. As a consequence, the physical and / or chemical properties of the materials or seals used, may not be suitable for the intended application. To avoid hydraulic shocks in pipelines, the flow velocities must be taken into account when designing valves for liquids.

3/2 way valve	**direct acting**	
pressure range	PN 0-16 bar	
orifice	DN 80 mm	
connection	flange	
function	valve normally closed (A ►B) symbol **NC**	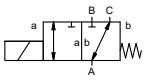
	valve normally open (A ►B) symbol **NO**	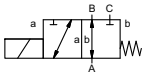
operating principle	pressure balanced, with spring return, intersecting switch-over	
body material	⓪	② steel galvanized
	③	⑤
	④ steel, nickel plated	⑥ stainless steel
valve seat	synthetic materials on metal	
seal materials	NBR	PTFE, FPM, EPDM

	general specifications		**options**
ports	FK	flanges PN 16	special flanges
function		NC	NO
pressure range	bar	0-16 A ⇨ B max. 16 / B ⇨ A max. 5 / A ⇨ C max. 16 / C ⇨ A max. 16	
Kv value	m³/h	55,0	
vacuum	leak rate		< 10^{-4} mbar•l•s^{-1}
pressure-vacuum	$P_1 \Leftrightarrow P_2$		upon request
back pressure	$P_2 > P_1$	see pressure range	
media		gaseous - liquid - highly viscous - gelatinous - contaminated	
abrasive media			upon request
damping	opening closing		
flow direction		see pressure range	
switching cycles	1/min	20	
switching time	ms	opening 600 closing 800	
media temperature	°C	DC: -20 to +80 AC: -20 to +80	
ambient temperature	°C	DC: -20 to +80 AC: -20 to +80	
limit switches			inductive
manual override			
approvals			LR/DNV/WAZ
mounting			
weight	kg	FK 48,8	
additional equipment			upon request

	electrical specifications		**options**
nominal voltage	U_n	DC 24 V +5%/-10%	special voltage upon request
	U_n	AC 230 V +5%/-10% 40-60 Hz	special voltage upon request
actuation	DC	direct-current magnet	
	AC	direct-current magnet with integrated rectifier	
insulating rating	H	180°C	
protection	IP65		
energized duty rating	ED	100%	
connection		plug acc. DIN EN 175301-803 form A, 4 positions x90° / wire diameter 6-8 mm	terminal box M16x1,5
optional			
additional equipment		illuminated plug with varistor	
current draw	N-coil	DC 24 V 4,36 A AC 230 V 40-60 Hz 0,63 A	
	H-coil		
			AC 230 V 40-60 Hz 0,76 A
explosion proof			terminal box M16x1,5
			Ⓔx II 3G Ex ec IIC T3 Ta -20...+80°C Gc
			Ⓔx II 3D Ex tc IIIC T195°C Ta -20...+80°C Dc
			Ⓔx II 3G Ex h IIC T3 Gc
			Ⓔx II 3D Ex h IIIC T195°C Dc
limit switches		inductive (I)	normally open-PNP
		inductive (B)	normally open-PNP

specifications not highlighted are standard
specifications highlighted in grey are optional

müller co-ax gmbh • Friedrich-Müller-Str. 1 • 74670 Forchtenberg • Germany • fon +49(0)7947/828-0 • fax +49(0)7947/828-11 • Email info@co-ax.com

coax® data sheet - coaxial valve

type FK 80 DR

function: **NC**
closed when not energized (A ▶B)

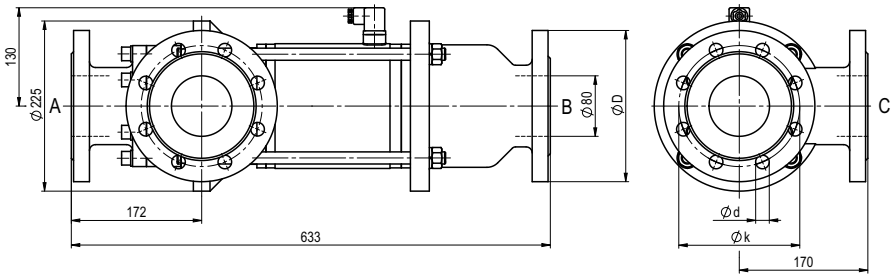

flanges PN	DIN	ØD	Øk	Ød
16	EN 1092-1	200	160	18

function: **NO**
open when not energized (A ▶B)

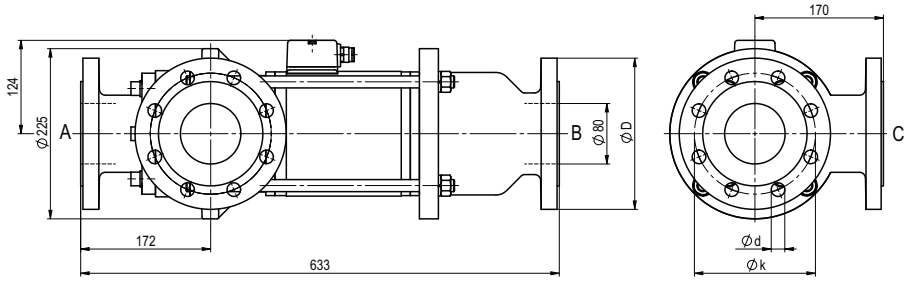

müller co-ax shall retain the rights to these documents. Modifications to the documents are strictly prohibited.
Rights reserved to make technical alterations • Not responsible for printing errors • Detailed drawings can be obtained upon request