coax® data sheet - module and valve manifold

type FMX-2/3/4/5

09/2025



⚠ Above stated body materials refer to the valve port connections that get in contact with the media only!

details needed

- orifice
- port
- function NC/NO
- operating pressure
- flow rate
- media
- media temperature

2/2-way valve	**externally controlled**
pressure range	PN 0-25 (0-40) bar
orifice	DN 10 /15 / 20 / 25 mm
connection	thread
function	valve normally closed symbol **NC** 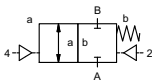
	valve normally open symbol **NO** 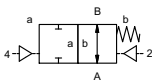

general specifications

type		FMX-2	FMX-3	FMX-4	FMX-5
orifice	DN	10	15	20	25
port thread valve	G	3/8 - 1/2	1/2 - 3/4	3/4 - 1	1 - 1 1/4
port thread module|valve manifold	G	1 | 1	1 | 1 1/4	- | 1 1/2	- | 2
function		NC / NO			
pressure range	bar	0-16 bar / 0-25 bar (0-40 bar upon request)			
media		gaseous - liquid			
media temperature	°C	-20 to +120 °C (consider seal materials)			
switching time opening	ms	30	30	35	35
switching time closing	ms	35	40	60	70
body materials valve	ⓢ	stainless steel 1.4404	stainless steel 1.4404	stainless steel 1.4404	stainless steel 1.4404
	ⓐ	aluminium	aluminium	aluminium	aluminium
slots		1/ 2 / 3 / 4 / 5	1/ 2 / 3 / 4 / 5	2 / 3 / 4 / 5	2 / 3 / 4 / 5
body materials manifold	ⓢ	stainless steel 1.4404	stainless steel 1.4404	stainless steel 1.4404	stainless steel 1.4404
	ⓐ			aluminium	aluminium
body materials module	ⓐ	aluminium	aluminium		
	ⓢ				
seal materials		PTFE, FKM, EPDM, PU, H-Ecopur			
valve seat		synthetic materials on metal			
operating principle		pressure balanced, with spring return			

⚠ The valves' technical design is based on media and application requirements. This can lead to deviations from the general specifications shown on the data sheet with regards to the design, sealing materials and characteristics.

⚠ If order or application specifications are incomplete or imprecise there exists a risk of an incorrect technical design of the valve for the required application. As a consequence, the physical and / or chemical properties of the materials or seals used, may not be suitable for the intended application. To avoid hydraulic shocks in pipelines, the flow velocities must be taken into account when designing valves for liquids.

specifications not highlighted are standard
specifications highlighted in grey are optional

coax® data sheet - module and valve manifold

type FMX-2/3/4/5

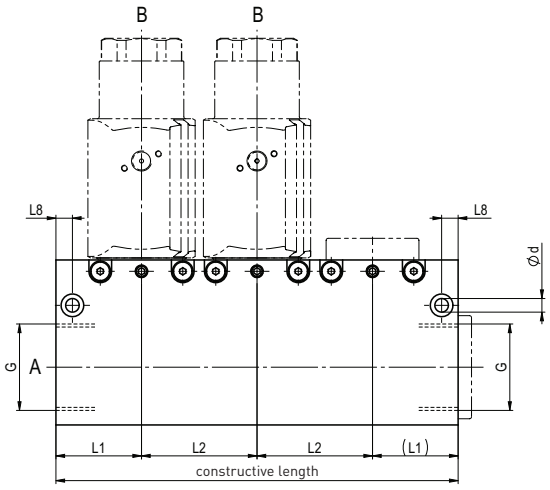

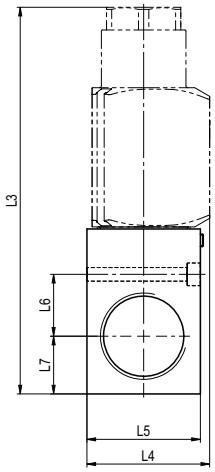

valve manifold

constructive length

type	L1	L2	L3	L4	L5	L6	L7	L8	ød	1-station	2-station	3-station	4-station	5-station
FMX-2	38	47	152	53	50	30	21	8	6,6 [M6]	-	123	170	217	264
FMX-3	41,5	56	187	59,5	55	30	28	8	6,6 [M6]	-	139	195	251	307
FMX-4	42,5	65	213	71	70	33	33	10	9 [M8]	-	150	215	280	345
FMX-5	47,5	75	236	75,5	75	38	38	11	11 [M10]	-	170	245	320	395

module

constructive length

type	L9	L10
FMX-2	161	28
FMX-3	181,5	32

1-station	2-station	3-station	4-station	5-station
78	131	184	237	290
78	131	184	237	290

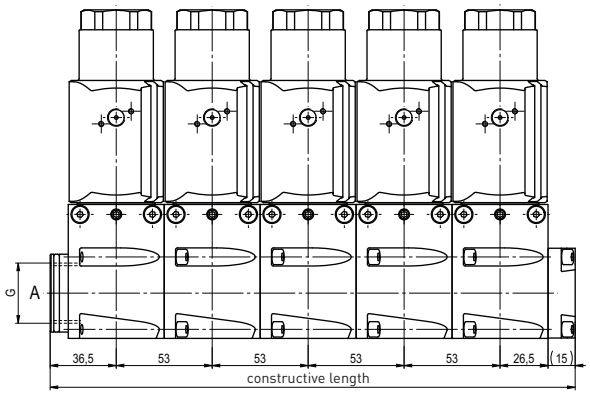

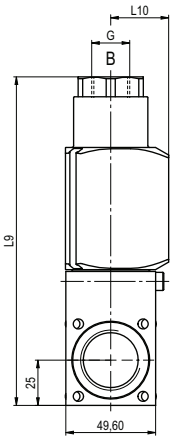

müller co-ax shall retain the rights to these documents. Modifications to the documents are strictly prohibited.
Rights reserved to make technical alterations • Not responsible for printing errors • Detailed drawings can be obtained upon request

coax® data sheet - module

type MK 10 - MK 25

06/2026

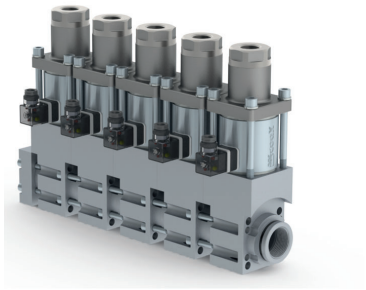

⚠ Above stated body materials refer to the valve port connections that get in contact with the media only!

details needed

- orifice
- port
- function NC/NO
- operating pressure
- flow rate
- media
- media temperature

2/2-way valve	**direct acting**
pressure range	PN 0-100 bar
orifice	DN 10-25 mm
connection	thread
function	valve normally closed symbol **NC** 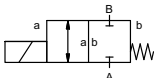
	valve normally open symbol **NO** 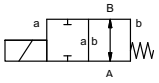

general specifications

	MK 10	MK 15	MK 20	MK 25
type				
orifice	DN 10	15	20	25
port thread valve	G 1/4 - 3/4	3/8 - 3/4	3/4 - 1 1/4	1 - 1 1/2
port thread module	G 1	1	1 1/4	1 1/2
function	NC / NO			
pressure range	bar 0-16 / 40 / 63 / 100			
media	gaseous - liquid - contaminated			
media temperature	°C -20 to +120	-20 to +160	-20 to +160	-20 to +160
switching time opening	ms 25	80	110	130
switching time closing	ms 25	80	110	130
body materials valve	① brass	brass	brass	brass
	⓪ aluminium	aluminium	aluminium	aluminium
	②	steel, galvanized	steel, galvanized	steel, galvanized
	③ brass nickel plated	brass nickel plated	brass nickel plated	brass nickel plated
	④	steel nickel plated	steel nickel plated	steel nickel plated
	⑤			
	⑥ stainless steel	stainless steel	stainless steel	stainless steel
body materials module	⓪ aluminium	aluminium	aluminium	aluminium
	⑥ stainless steel	stainless steel		
seal materials	NBR, PTFE, FPM, CR, EPDM			
valve seat	synthetic materials on metal			
operating principle	pressure balanced, with spring return			

⚠ The valves' technical design is based on media and application requirements. This can lead to deviations from the general specifications shown on the data sheet with regards to the design, sealing materials and characteristics.

⚠ If order or application specifications are incomplete or imprecise there exists a risk of an incorrect technical design of the valve for the required application. As a consequence, the physical and / or chemical properties of the materials or seals used, may not be suitable for the intended application. To avoid hydraulic shocks in pipelines, the flow velocities must be taken into account when designing valves for liquids.

specifications not highlighted are standard
specifications highlighted in grey are optional

coax® data sheet - module

type MK 10 - MK 25

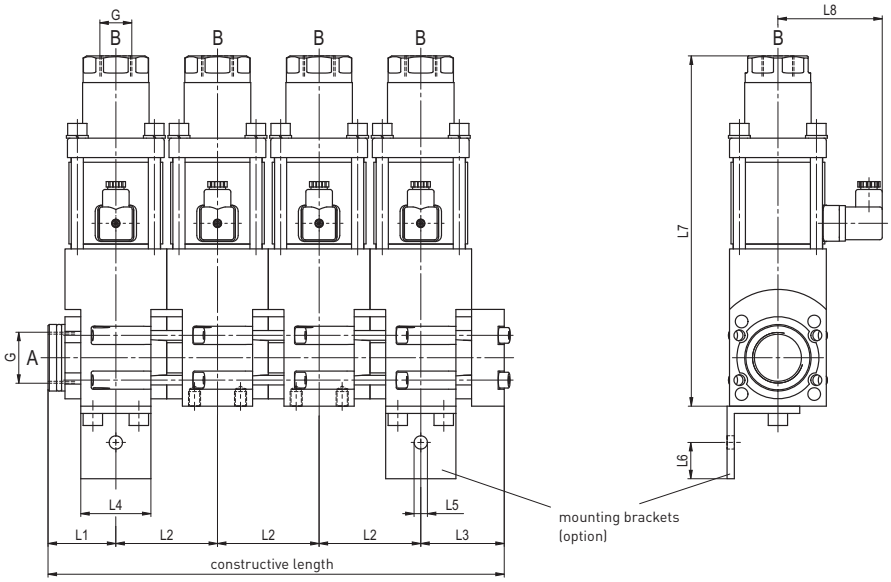

chart with dimensions

type	L1	L2	L3	L4	L5	L6	L7	L8	L9
MK 10	36,5	53	41,5	38	Ø8,5	20	186	72	20
MK 15	46	72	64	52	Ø9	30	247	81	20
MK 20	56	84	69	58	Ø11	30	290	86	30
MK 25	61	94	84	68	Ø11	30	339	92	30

chart with overall length

type	1-station	2-station	3-station	4-station	5-station	6-station	7-station	8-station
MK 10	78	131	184	237	290	343	396	449
MK 15	110	182	254	326	398	470	542	614
MK 20	125	209	293	377	461	545	629	713
MK 25	145	239	333	427	521	615	709	803

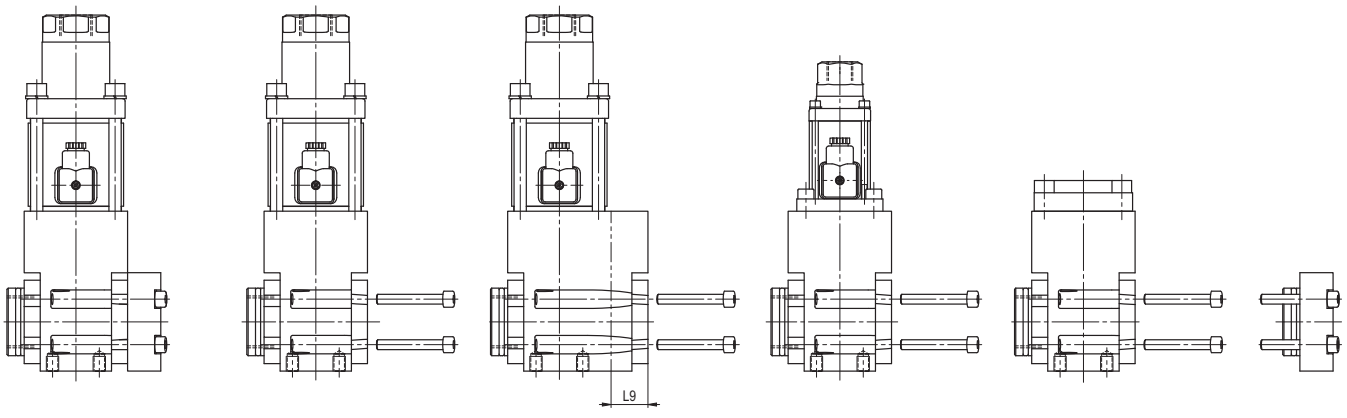

basis module | extension module | separation module | reduction module | module with blind cover (thread option) | end plate (thread option)

müller co-ax shall retain the rights to these documents. Modifications to the documents are strictly prohibited.
Rights reserved to make technical alterations • Not responsible for printing errors • Detailed drawings can be obtained upon request

coax® data sheet - module

type VMK 10 - VMK 32

06/2026



⚠ Above stated body materials refer to the valve port connections that get in contact with the media only!

details needed

- orifice
- port
- function NC/NO
- operating pressure
- flow rate
- media
- media temperature

⚠ The valves' technical design is based on media and application requirements. This can lead to deviations from the general specifications shown on the data sheet with regards to the design, sealing materials and characteristics.

⚠ If order or application specifications are incomplete or imprecise there exists a risk of an incorrect technical design of the valve for the required application. As a consequence, the physical and / or chemical properties of the materials or seals used, may not be suitable for the intended application. To avoid hydraulic shocks in pipelines, the flow velocities must be taken into account when designing valves for liquids.

2/2-way valve	**externally controlled**
pressure range	PN 0-100 bar
orifice	DN 10-32 mm
connection	thread
function	valve normally closed symbol **NC** 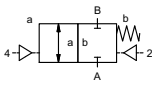
	valve normally open symbol **NO** 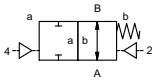

general specifications

	VMK 10	VMK 15	VMK 20	VMK 25	VMK 32
type					
orifice	DN 10	15	20	25	32
port thread valve	G 1/4 - 3/4	3/8 - 3/4	3/4 - 1 1/4	1 - 1 1/2	1 1/4 - 1 1/2
port thread module	G 1	1	1 1/4	1 1/2	1 1/2
function	NC / NO				
pressure range	bar 0-16 / 40 / 63 / 100				
media	gaseous - liquid - highly viscous - gelatinous - pasty - contaminated				
media temperature	°C -20 to +160	-20 to +160	-20 to +160	-20 to +160	-20 to +160
switching time opening	ms 30-3000	50-3000	50-3000	50-3000	50-3000
switching time closing	ms 30-3000	50-3000	50-3000	50-3000	50-3000
body materials valve	① brass	brass	brass	brass	brass
	⓪ aluminium	aluminium	aluminium	aluminium	aluminium
	②	steel, galvanized	steel, galvanized	steel, galvanized	steel, galvanized
	③ brass nickel plated	brass nickel plated	brass nickel plated	brass nickel plated	brass nickel plated
	④	steel nickel plated	steel nickel plated	steel nickel plated	steel nickel plated
	⑤				
	⑥ stainless steel	stainless steel	stainless steel	stainless steel	stainless steel
body materials module	⓪ aluminium	aluminium	aluminium	aluminium	aluminium
	⑥ stainless steel	stainless steel			
seal materials	NBR, PTFE, FPM, CR, EPDM				
valve seat	synthetic materials on metal				
operating principle	pressure balanced, with spring return				

■ specifications not highlighted are standard
specifications highlighted in grey are optional

müller co-ax gmbh • Friedrich-Müller-Str. 1 • 74670 Forchtenberg • Germany • fon +49(0)7947/828-0 • fax +49(0)7947/828-11 • Email info@co-ax.com

coax® data sheet - module

type VMK 10 - VMK 32

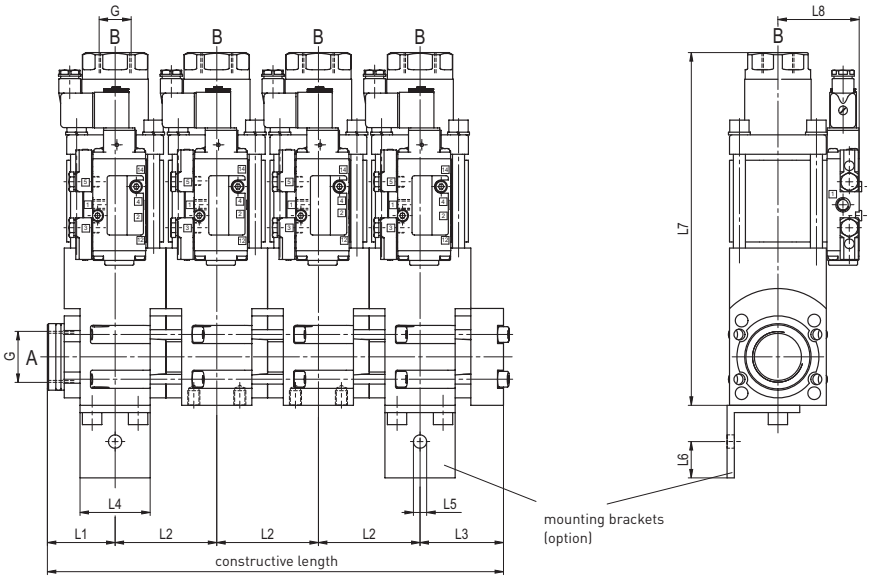

chart with dimensions

type	L1	L2	L3	L4	L5	L6	L7	L8	L9
VMK 10	36,5	53	41,5	38	Ø8,5	20	186	90	20
VMK 15	46	72	64	52	Ø9	30	249	62	20
VMK 20	56	84	69	58	Ø11	30	292	67	30
VMK 25	61	94	84	68	Ø11	30	339	72	30
VMK 32	61	94	84	68	Ø11	30	362	72	30

chart with overall length

type	1-station	2-station	3-station	4-station	5-station	6-station	7-station	8-station
VMK 10	78	131	184	237	290	343	396	449
VMK 15	110	182	254	326	398	470	542	614
VMK 20	125	209	293	377	461	545	629	713
VMK 25	145	239	333	427	521	615	709	803
VMK 32	145	239	333	427	521	615	709	803

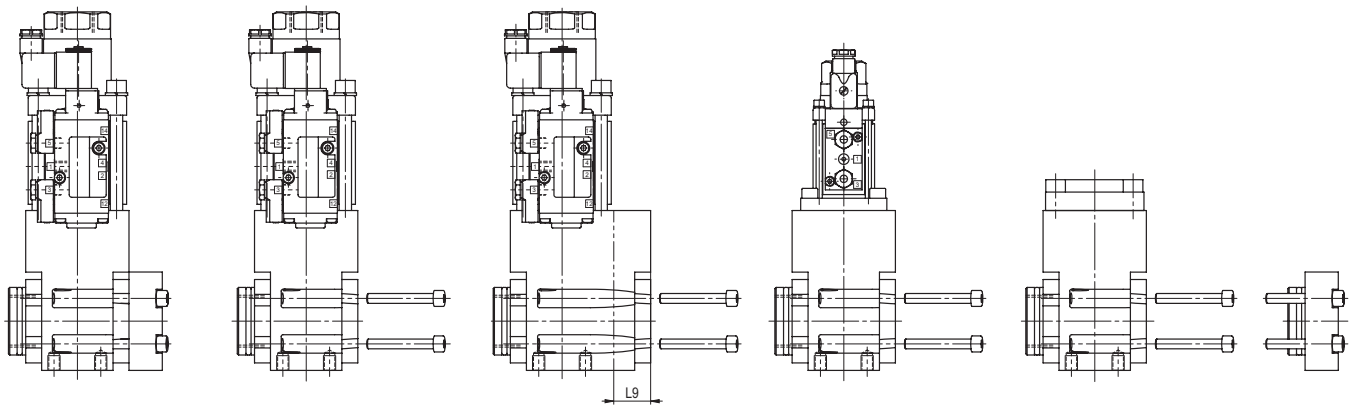

basis module | extension module | separation module | reduction module | module with blind cover (thread option) | end plate (thread option)

müller co-ax shall retain the rights to these documents. Modifications to the documents are strictly prohibited.
Rights reserved to make technical alterations • Not responsible for printing errors • Detailed drawings can be obtained upon request

coax® data sheet - module

type VMK-H 10

02/2024

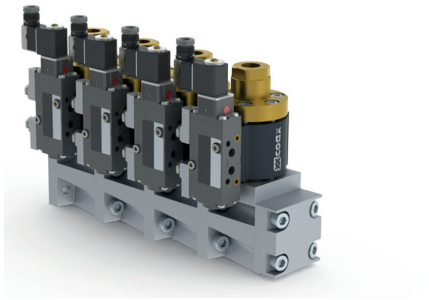

⚠ Above stated body materials refer to the valve port connections that get in contact with the media only!

details needed

- orifice
- port
- function NC/NO
- operating pressure
- flow rate
- media
- media temperature

2/2-way valve	**externally controlled**
pressure range	PN 0-200 bar
orifice	DN 10 mm
connection	thread
function	valve normally closed symbol **NC** 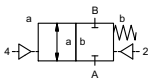
	valve normally open symbol **NO** 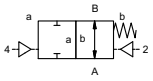

general specifications

type		VMK-H 10
orifice	DN	10
port thread valve	G	3/8 - 1/2
port thread module	G	1/2
function		NC / NO
pressure range	bar	0-200
media		gaseous - liquid - highly viscous
media temperature	°C	-10 to +160
switching time opening	ms	30-3000
switching time closing	ms	50-3000
body materials valve	①	brass
	⓪	
	②	
	③	
	④	
	⑤	
	⑥	stainless steel
body materials module	⓪	aluminium
	⑥	
seal materials		NBR, PTFE, FPM
valve seat		synthetic materials on metal
operating principle		pressure balanced, with spring return

⚠ The valves' technical design is based on media and application requirements. This can lead to deviations from the general specifications shown on the data sheet with regards to the design, sealing materials and characteristics.

⚠ If order or application specifications are incomplete or imprecise there exists a risk of an incorrect technical design of the valve for the required application. As a consequence, the physical and / or chemical properties of the materials or seals used, may not be suitable for the intended application. To avoid hydraulic shocks in pipelines, the flow velocities must be taken into account when designing valves for liquids.

■ specifications not highlighted are standard
specifications highlighted in grey are optional

coax® data sheet - module

type VMK-H 10

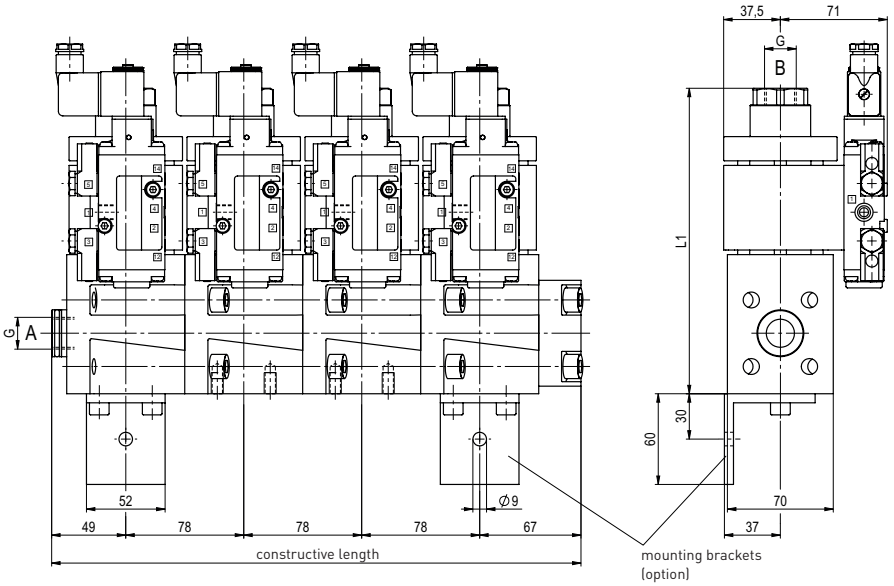

chart with dimensions

type	L1
standard	202
with inductive limit switches	222

chart with overall length

type	1-station	2-station	3-station	4-station	5-station	6-station	7-station	8-station
VMK-H 10	116	194	272	350	428	506	584	662

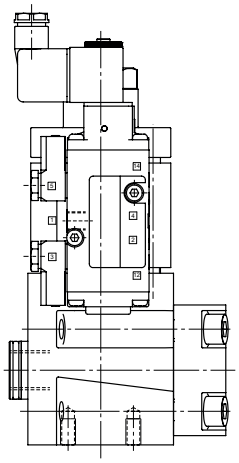

basis module

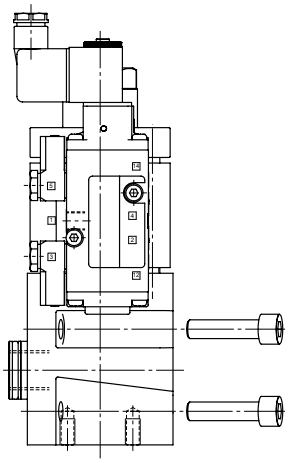

extension module

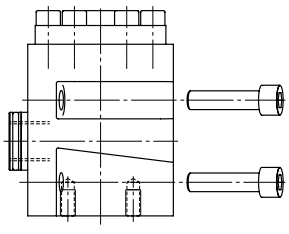

module with blind cover
(thread option)

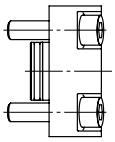

end plate
(thread option)

müller co-ax shall retain the rights to these documents. Modifications to the documents are strictly prohibited.
Rights reserved to make technical alterations • Not responsible for printing errors • Detailled drawings can be obtained upon request