coax® data sheet - coaxial valve

type VMK-H 15 DR
VFK-H 15 DR

09/2022



3/2 way valve	**externally controlled**
pressure range	PN 0-200 bar
orifice	DN 15 mm
connection	thread/flange
function	valve normally closed (A ▶B) symbol **NC**

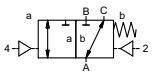

	valve normally open (A ▶B) symbol **NO**

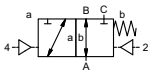

operating principle	pressure balanced, with spring return, intersecting switch-over
body material	① ② steel galvanized ③ ⑤ without non-ferr. Metals ④ steel, nickel plated ⑥ stainless steel
valve seat	synthetic materials on metal
seal materials	NBR PTFE, FPM, CR, EPDM

⚠ Above stated body materials refer to the valve port connections that get in contact with the media only!

details needed for main valve

- orifice
- port
- function NC/NO
- operating pressure
- inlet pressure at A, B or C
- flow rate
- media
- media temperature
- ambient temperature
- type of actuation

details needed for pneumatic actuation

- nominal voltage
- type of protection
- actuation pressure range min/max
- pilot valve type

details needed for hydraulic actuation

- actuation pressure range min/max
- hydraulic control valve function

⚠ The valves' technical design is based on media and application requirements. This can lead to deviations from the general specifications shown on the data sheet with regards to the design, sealing materials and characteristics.

⚠ If order or application specifications are incomplete or imprecise there exists a risk of an incorrect technical design of the valve for the required application. As a consequence, the physical and / or chemical properties of the materials or seals used, may not be suitable for the intended application. To avoid hydraulic shocks in pipelines, the flow velocities must be taken into account when designing valves for liquids.

general specifications			**options**
ports	VMK-H	threads G 1/2	special threads
	VFK-H	flanges PN 160 / 250	special flanges
function		NC	NO
pressure range	bar	0-200	
		A ⇨ B max. 200 / B ⇨ A max. 100 / A ⇨ C max. 200 / C ⇨ A max. 200	
Kv value	m^3/h	4.4	
vacuum	leak rate		< 10^{-6} mbar•l•s^{-1}
pressure-vacuum	$P_1 \Leftrightarrow P_2$		pressure side max. 200 bar vacuum side leak rate upon request
back pressure	$P_2 > P_1$	see pressure range	
media		gaseous - liquid - highly viscous	
abrasive media			available
damping	opening		
	closing	by throttles on pilot valve	
flow direction		see pressure range	
switching cycles	1/min	200	
switching time	ms	opening 50-3000	
		closing 50-3000	
media temperature	°C	direct mounted pilot valve 60	remote mounted pilot valve outside
ambient temperature	°C	direct mounted pilot valve 50	temperatur range of media max. 160 °C
flush ports			available
leak ports			available
limit switches			inductive / mechanical upon request
manual override		via pilot valve	
approvals			LR/DNV/WAZ
mounting			mounting brackets
weight	kg	VMK-H 6.5 VFK-H 7.3	
additional equipment			upon request

electrical specifications			**options**
nominal voltage	U_n	DC 24 V	special voltage upon request
	U_n	AC 230 V 50 Hz	special voltage upon request
power consumption	DC	4.8 W	2.5 W (actuation pressure range 4-7 bar)
	AC	pick up 11.0 VA holding 8.5 VA	
protection	IP65 (P54)	acc. DIN 40050	
energized duty rating	ED	100%	
connection		plug acc. DIN EN 175301-803 form B, 2 positions x180° / wire diameter 6-8 mm	
optional	M12x1	connector acc. DESINA	connector acc. VDMA
additional equipment		illuminated plug with varistor	
max. temperature	media	60°C	
	ambient	50°C	
explosion proof	E Ex e II T5	nominal voltage U_n	DC 24 V 3.25 W
		power consumption	AC 230 V 50 Hz 2.90 W

pneumatic specifications			**options**
actuation pressure range	bar	4-8	
air consumption	cm^3/stroke	24	
cycle speed		main valve speed variable by throttleson pilot valve	
control		preferably 5/2 way pilot valve	
pilot valve interface		co-ax / Namur	ISO 1
actuator ports	2/4	G 1/8	G 1/4

hydraulic specifications			**options**
actuation pressure range	bar	15-30 / 30-60	
control		preferably 4/2 way control valve	
actuator ports	X/Y	G 1/4	NPT 1/4
by media			

- specifications not highlighted are standard

specifications highlighted in grey are optional

müller co-ax gmbh • Friedrich-Müller-Str. 1 • 74670 Forchtenberg • Germany • fon +49(0)7947/828-0 • fax +49(0)7947/828-11 • Email info@co-ax.com

coax® data sheet - coaxial valve

type VMK-H 15 DR
VFK-H 15 DR

function: **NC**
closed when not energized (A ▶B)

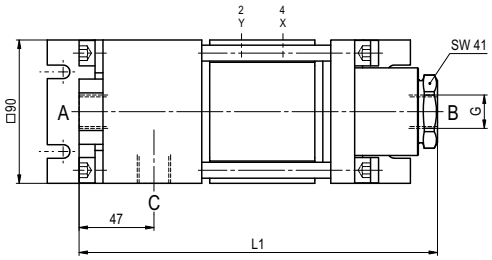

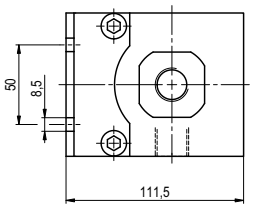

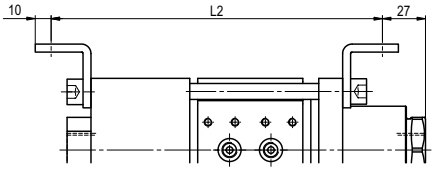

constructive length	L1	L2	L3
standard	225	208	313
with inductive limit switches	255	238	343
with force-feed lubrication nipple	255	238	343
with mechanical limit switches	-	-	-

flanges PN	DIN	ØD	Øk	Ød
160	EN 1092-1	105	75	14
250	EN 1092-1	130	90	18

function: **NO**
open when not energized (A ▶B)

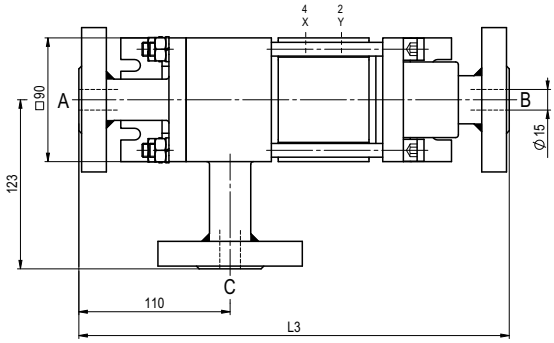

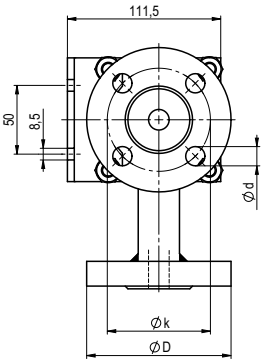

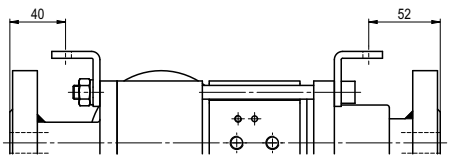

pneumatic specifications

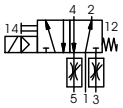

5/2 way pilot valve
flow rate 700 l/min
pressure range 3-10 bar G 1/8

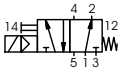

5/2 way pilot valve ISO 1
flow rate 700 l/min
pressure range 3-10 bar G 1/4

müller co-ax shall retain the rights to these documents. Modifications to the documents are strictly prohibited.
Rights reserved to make technical alterations • Not responsible for printing errors • Detailled drawings can be obtained upon request

coax® data sheet - coaxial valve

type VMK-H 20 DR
VFK-H 20 DR

09/2022



3/2 way valve	**externally controlled**
pressure range	PN 0-200 bar
orifice	DN 20 mm
connection	thread/flange
function	valve normally closed (A ▶B) symbol **NC**

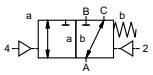

	valve normally open (A ▶B) symbol **NO**

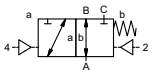

operating principle	pressure balanced, with spring return, intersecting switch-over
body material	① ② steel galvanized ③ ⑤ without non-ferr. Metals ④ steel, nickel plated ⑥ stainless steel
valve seat	synthetic materials on metal
seal materials	NBR PTFE, FPM, CR, EPDM

⚠ Above stated body materials refer to the valve port connections that get in contact with the media only!

details needed for main valve
- orifice
- port
- function NC/NO
- operating pressure
- inlet pressure at A, B or C
- flow rate
- media
- media temperature
- ambient temperature
- type of actuation

details needed for pneumatic actuation
- nominal voltage
- type of protection
- actuation pressure range min/max
- pilot valve type

details needed for hydraulic actuation
- actuation pressure range min/max
- hydraulic control valve function

⚠ The valves' technical design is based on media and application requirements. This can lead to deviations from the general specifications shown on the data sheet with regards to the design, sealing materials and characteristics.

⚠ If order or application specifications are incomplete or imprecise there exists a risk of an incorrect technical design of the valve for the required application. As a consequence, the physical and / or chemical properties of the materials or seals used, may not be suitable for the intended application. To avoid hydraulic shocks in pipelines, the flow velocities must be taken into account when designing valves for liquids.

general specifications			**options**
ports	VMK-H	threads G 3/4	special threads
	VFK-H	flanges PN 160 / 250	special flanges
function		NC	NO
pressure range	bar	0-200	
		A ⇨ B max. 200 / B ⇨ A max. 100 / A ⇨ C max. 200 / C ⇨ A max. 200	
Kv value	m^3/h	7.6	
vacuum	leak rate		< 10^{-6} mbar•l•s^{-1}
pressure-vacuum	$P_1 \Leftrightarrow P_2$		pressure side max. 200 bar vacuum side leak rate upon request
back pressure	$P_2 > P_1$	see pressure range	
media		gaseous - liquid - highly viscous	
abrasive media			available
damping	opening		
	closing	by throttles on pilot valve	
flow direction		see pressure range	
switching cycles	1/min	200	
switching time	ms	opening 50-3000	
		closing 50-3000	
media temperature	°C	direct mounted pilot valve 60	remote mounted pilot valve outside
ambient temperature	°C	direct mounted pilot valve 50	temperatur range of media max. 160 °C
flush ports			available
leak ports			available
limit switches			inductive / mechanical upon request
manual override		via pilot valve	
approvals			LR/DNV/WAZ
mounting			mounting brackets
weight	kg	VMK-H 7.8 VFK-H 9.2	
additional equipment			upon request

electrical specifications			**options**
nominal voltage	U_n	DC 24 V	special voltage upon request
	U_n	AC 230 V 50 Hz	special voltage upon request
power consumption	DC	4.8 W	2.5 W (actuation pressure range 4-7 bar)
	AC	pick up 11.0 VA holding 8.5 VA	
protection	IP65 (P54)	acc. DIN 40050	
energized duty rating	ED	100%	
connection		plug acc. DIN EN 175301-803 form B, 2 positions x180° / wire diameter 6-8 mm	
optional	M12x1	connector acc. DESINA	connector acc. VDMA
additional equipment		illuminated plug with varistor	
max. temperature	media	60°C	
	ambient	50°C	
explosion proof	E Ex e II T5	nominal voltage U_n	DC 24 V 3.25 W
		power consumption	AC 230 V 50 Hz 2.90 W

pneumatic specifications			**options**
actuation pressure range	bar	4-8	
air consumption	cm^3/stroke	24	
cycle speed		main valve speed variable by throttleson pilot valve	
control		preferably 5/2 way pilot valve	
pilot valve interface		co-ax / Namur	ISO 1
actuator ports	2/4	G 1/8	G 1/4

hydraulic specifications			**options**
actuation pressure range	bar	15-30 / 30-60	
control		preferably 4/2 way control valve	
actuator ports	X/Y	G 1/4	NPT 1/4
by media			

- specifications not highlighted are standard

specifications highlighted in grey are optional

müller co-ax gmbh • Friedrich-Müller-Str. 1 • 74670 Forchtenberg • Germany • fon +49(0)7947/828-0 • fax +49(0)7947/828-11 • Email info@co-ax.com

coax® data sheet - coaxial valve

type VMK-H 20 DR
VFK-H 20 DR

function: **NC**
closed when not energized (A ▶B)

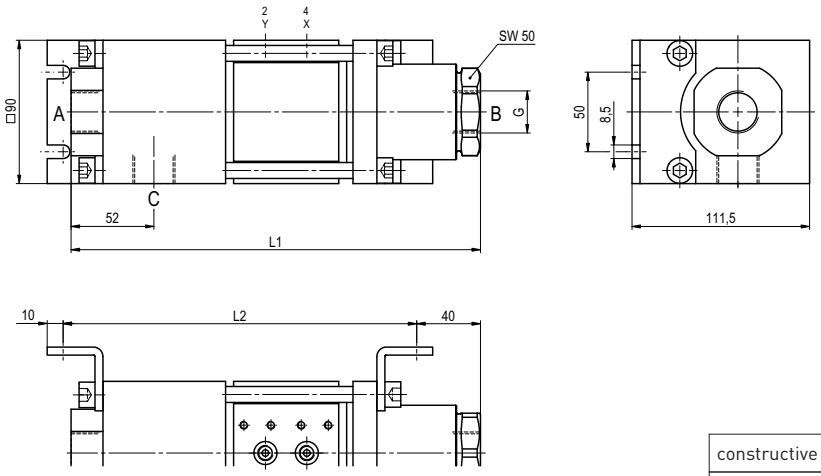

constructive length	L1	L2	L3
standard	257	222	365
with inductive limit switches	287	252	395
with force-feed lubrication nipple	287	252	395
with mechanical limit switches	-	-	-

flanges PN	DIN	ØD	Øk	Ød
160	EN 1092-1	130	90	18
250	EN 1092-1	135	95	18

function: **NO**
open when not energized (A ▶B)

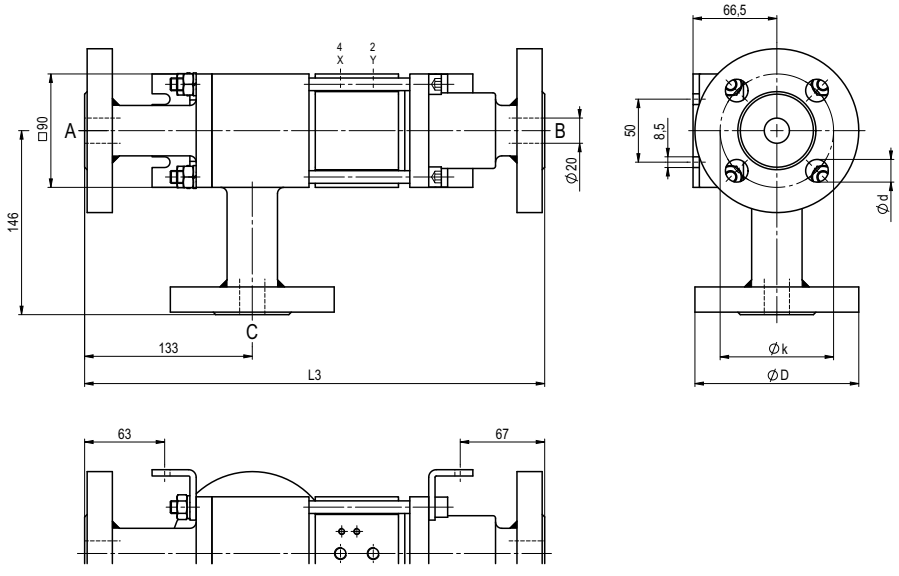

pneumatic specifications

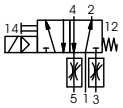

5/2 way pilot valve
flow rate 700 l/min
pressure range 3-10 bar G 1/8

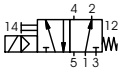

5/2 way pilot valve ISO 1
flow rate 700 l/min
pressure range 3-10 bar G 1/4

müller co-ax shall retain the rights to these documents. Modifications to the documents are strictly prohibited.
Rights reserved to make technical alterations • Not responsible for printing errors • Detailled drawings can be obtained upon request

coax® data sheet - coaxial valve

type VMK-H 25 DR
VFK-H 25 DR

09/2022



3/2 way valve	**externally controlled**
pressure range	PN 0-200 bar
orifice	DN 25 mm
connection	thread/flange
function	valve normally closed (A ▶B) symbol **NC**

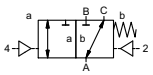

	valve normally open (A ▶B) symbol **NO**

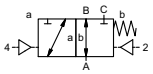

operating principle	pressure balanced, with spring return, intersecting switch-over
body material	① ② steel galvanized ③ ⑤ without non-ferr. Metals ④ steel, nickel plated ⑥ stainless steel
valve seat	synthetic materials on metal
seal materials	NBR PTFE, FPM, CR, EPDM

⚠ Above stated body materials refer to the valve port connections that get in contact with the media only!

details needed for main valve

- orifice
- port
- function NC/NO
- operating pressure
- inlet pressure at A, B or C
- flow rate
- media
- media temperature
- ambient temperature
- type of actuation

details needed for pneumatic actuation

- nominal voltage
- type of protection
- actuation pressure range min/max
- pilot valve type

details needed for hydraulic actuation

- actuation pressure range min/max
- hydraulic control valve function

⚠ The valves' technical design is based on media and application requirements. This can lead to deviations from the general specifications shown on the data sheet with regards to the design, sealing materials and characteristics.

⚠ If order or application specifications are incomplete or imprecise there exists a risk of an incorrect technical design of the valve for the required application. As a consequence, the physical and / or chemical properties of the materials or seals used, may not be suitable for the intended application. To avoid hydraulic shocks in pipelines, the flow velocities must be taken into account when designing valves for liquids.

general specifications			**options**
ports	VMK-H	threads G 1	special threads
	VFK-H	flanges PN 160 / 250	special flanges
function		NC	NO
pressure range	bar	0-200	
		A ⇨ B max. 200 / B ⇨ A max. 100 / A ⇨ C max. 200 / C ⇨ A max. 200	
Kv value	m^3/h	10.8	
vacuum	leak rate		< 10^{-6} mbar•l•s^{-1}
pressure-vacuum	$P_1 \Leftrightarrow P_2$		pressure side max. 200 bar vacuum side leak rate upon request
back pressure	$P_2 > P_1$	see pressure range	
media		gaseous - liquid - highly viscous	
abrasive media			available
damping	opening		
	closing	by throttles on pilot valve	
flow direction		see pressure range	
switching cycles	1/min	200	
switching time	ms	opening 50-3000	
		closing 50-3000	
media temperature	°C	direct mounted pilot valve 60	remote mounted pilot valve outside
ambient temperature	°C	direct mounted pilot valve 50	temperatur range of media max. 160 °C
flush ports			available
leak ports			available
limit switches			inductive / mechanical upon request
manual override		via pilot valve	
approvals			LR/DNV/WAZ
mounting			mounting brackets
weight	kg	VMK-H 10.2 VFK-H 11.8	
additional equipment			upon request

electrical specifications			**options**
nominal voltage	U_n	DC 24 V	special voltage upon request
	U_n	AC 230 V 50 Hz	special voltage upon request
power consumption	DC	4.8 W	2.5 W (actuation pressure range 4-7 bar)
	AC	pick up 11.0 VA holding 8.5 VA	
protection	IP65 (P54)	acc. DIN 40050	
energized duty rating	ED	100%	
connection		plug acc. DIN EN 175301-803 form B, 2 positions x180° / wire diameter 6-8 mm	
optional	M12x1	connector acc. DESINA	connector acc. VDMA
additional equipment		illuminated plug with varistor	
max. temperature	media	60°C	
	ambient	50°C	
explosion proof	E Ex e II T5	nominal voltage U_n	DC 24 V 3.25 W
		power consumption	AC 230 V 50 Hz 2.90 W

pneumatic specifications			**options**
actuation pressure range	bar	4-8	
air consumption	cm^3/stroke	24	
cycle speed		main valve speed variable by throttleson pilot valve	
control		preferably 5/2 way pilot valve	
pilot valve interface		co-ax / Namur	ISO 1
actuator ports	2/4	G 1/8	G 1/4

hydraulic specifications			**options**
actuation pressure range	bar	15-30 / 30-60	
control		preferably 4/2 way control valve	
actuator ports	X/Y	G 1/4	NPT 1/4
by media			

■ specifications not highlighted are standard
specifications highlighted in grey are optional

müller co-ax gmbh • Friedrich-Müller-Str. 1 • 74670 Forchtenberg • Germany • fon +49(0)7947/828-0 • fax +49(0)7947/828-11 • Email info@co-ax.com

coax® data sheet - coaxial valve

type VMK-H 25 DR
VFK-H 25 DR

function: **NC**
closed when not energized (A ▶B)

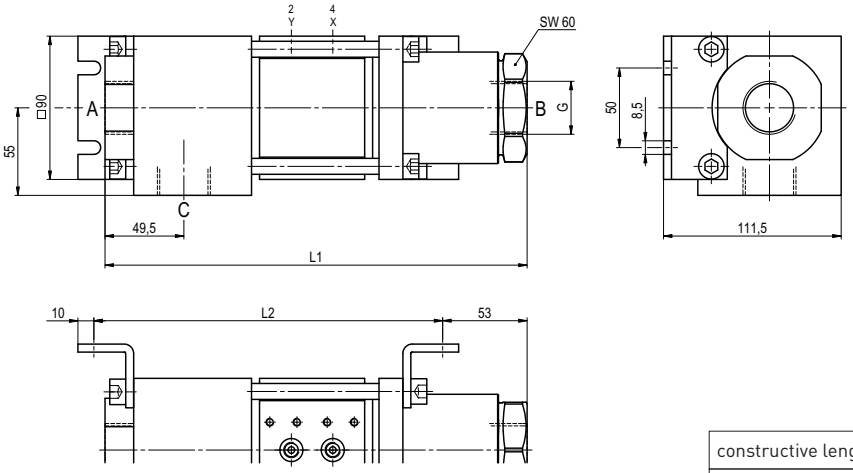

constructive length	L1	L2	L3
standard	265	219	370
with inductive limit switches	295	249	400
with force-feed lubrication nipple	295	249	400
with mechanical limit switches	-	-	-

flanges PN	DIN	ØD	Øk	Ød
160	EN 1092-1	140	100	18
250	EN 1092-1	150	105	22

function: **NO**
open when not energized (A ▶B)

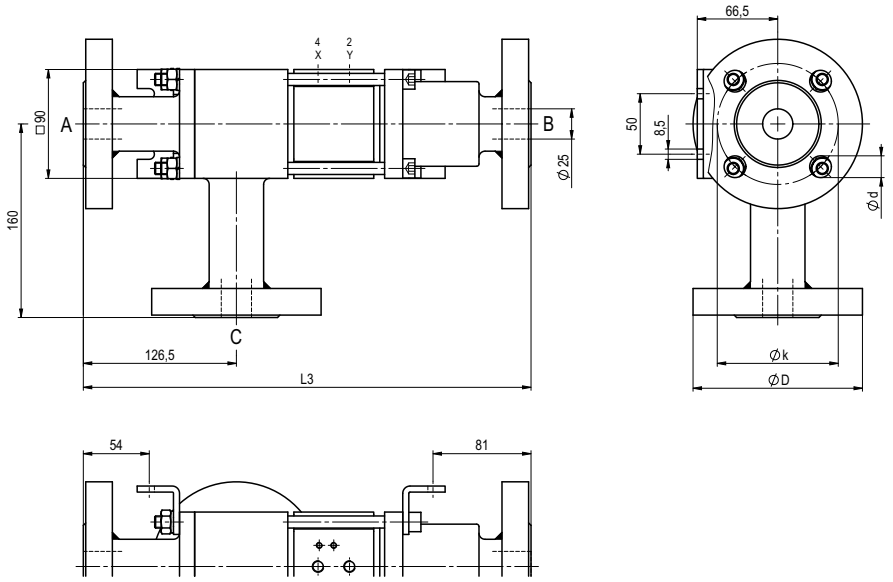

pneumatic specifications

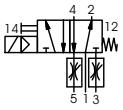

5/2 way pilot valve
flow rate 700 l/min
pressure range 3-10 bar G 1/8

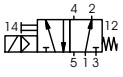

5/2 way pilot valve ISO 1
flow rate 700 l/min
pressure range 3-10 bar G 1/4

müller co-ax shall retain the rights to these documents. Modifications to the documents are strictly prohibited.
Rights reserved to make technical alterations • Not responsible for printing errors • Detailled drawings can be obtained upon request

coax® data sheet - coaxial valve

type VMK-H 40 DR
VFK-H 40 DR

09/2022



3/2 way valve	**externally controlled**
pressure range	PN 0-200 bar
orifice	DN 40 mm
connection	thread/flange
function	valve normally closed (A ▶B) symbol **NC**

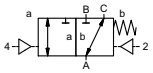

	valve normally open (A ▶B) symbol **NO**

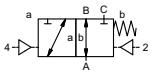

operating principle	pressure balanced, with spring return, intersecting switch-over
body material	① ② steel galvanized ③ ⑤ without non-ferr. Metals ④ steel, nickel plated ⑥ stainless steel
valve seat	synthetic materials on metal
seal materials	NBR PTFE, FPM, CR, EPDM

⚠ Above stated body materials refer to the valve port connections that get in contact with the media only!

details needed for main valve

- orifice
- port
- function NC/NO
- operating pressure
- inlet pressure at A, B or C
- flow rate
- media
- media temperature
- ambient temperature
- type of actuation

details needed for pneumatic actuation

- nominal voltage
- type of protection
- actuation pressure range min/max
- pilot valve type

details needed for hydraulic actuation

- actuation pressure range min/max
- hydraulic control valve function

⚠ The valves' technical design is based on media and application requirements. This can lead to deviations from the general specifications shown on the data sheet with regards to the design, sealing materials and characteristics.

⚠ If order or application specifications are incomplete or imprecise there exists a risk of an incorrect technical design of the valve for the required application. As a consequence, the physical and / or chemical properties of the materials or seals used, may not be suitable for the intended application. To avoid hydraulic shocks in pipelines, the flow velocities must be taken into account when designing valves for liquids.

general specifications			**options**
ports	VMK-H	threads G 1 1/2	special threads
	VFK-H	flanges PN 160 / 250	special flanges
function		NC	NO
pressure range	bar	0-200	
		A ⇨ B max. 200 / B ⇨ A max. 16 / A ⇨ C max. 200 / C ⇨ A max. 200	
Kv value	m^3/h	31.0	
vacuum	leak rate		< 10^{-4} mbar•l•s^{-1}
pressure-vacuum	$P_1 \Leftrightarrow P_2$		
back pressure	$P_2 > P_1$	see pressure range	
media		gaseous - liquid - highly viscous	
abrasive media			available
damping	opening		
	closing	by throttles on pilot valve	
flow direction		see pressure range	
switching cycles	1/min	150	
switching time	ms	opening 100-3000	
		closing 100-3000	
media temperature	°C	direct mounted pilot valve 60	remote mounted pilot valve outside
ambient temperature	°C	direct mounted pilot valve 50	temperatur range of media max. 160 °C
flush ports			available
leak ports			available
limit switches			inductive
manual override		via pilot valve	
approvals			LR/DNV/WAZ
mounting			mounting brackets
weight	kg	VMK-H 18.5 VFK-H 26.5	
additional equipment			upon request

electrical specifications			**options**
nominal voltage	U_n	DC 24 V	special voltage upon request
	U_n	AC 230 V 50 Hz	special voltage upon request
power consumption	DC	4.8 W	2.5 W (actuation pressure range 4-7 bar)
	AC	pick up 11.0 VA holding 8.5 VA	
protection	IP65 (P54)	acc. DIN 40050	
energized duty rating	ED	100%	
connection		plug acc. DIN EN 175301-803 form B, 2 positions x180° / wire diameter 6-8 mm	
optional	M12x1	connector acc. DESINA	connector acc. VDMA
additional equipment		illuminated plug with varistor	
max. temperature	media	60°C	
	ambient	50°C	
explosion proof	E Ex e II T5	nominal voltage U_n	DC 24 V 3.25 W
		power consumption	AC 230 V 50 Hz 2.90 W

pneumatic specifications			**options**
actuation pressure range	bar	4-8	
air consumption	cm^3/stroke	65	
cycle speed		main valve speed variable by throttleson pilot valve	
control		preferably 5/2 way pilot valve	
pilot valve interface		co-ax / Namur	ISO 1
actuator ports	2/4	G 1/8	G 1/4

hydraulic specifications			**options**
actuation pressure range	bar	15-30 / 30-60	
control		preferably 4/2 way control valve	
actuator ports	X/Y	G 1/4	NPT 1/4
by media			

- specifications not highlighted are standard

specifications highlighted in grey are optional

müller co-ax gmbh • Friedrich-Müller-Str. 1 • 74670 Forchtenberg • Germany • fon +49(0)7947/828-0 • fax +49(0)7947/828-11 • Email info@co-ax.com

coax® data sheet - coaxial valve

type VMK-H 40 DR
VFK-H 40 DR

function: **NC**
closed when not energized (A ▶B)

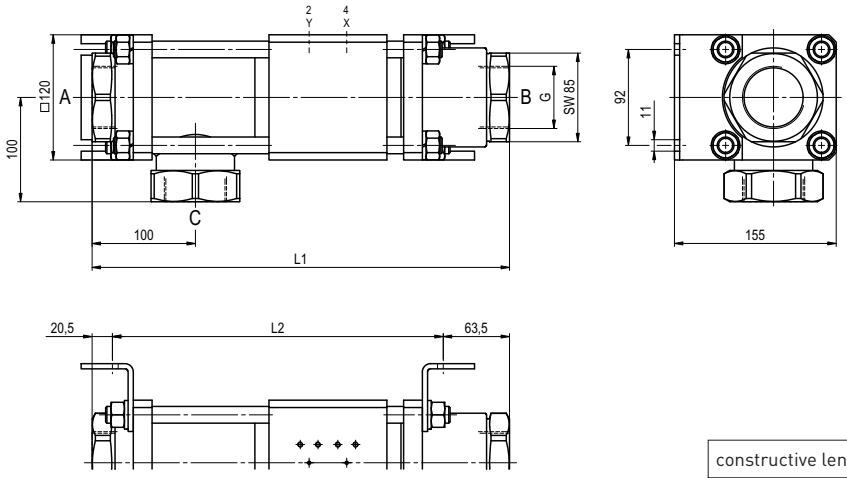

constructive length	L1	L2	L3
standard	400	316	500
with inductive limit switches	400	316	500
with force-feed lubrication nipple	400	316	500
with mechanical limit switches	-	-	-

flanges PN	DIN	ØD	Øk	Ød
160	EN 1092-1	170	125	22
250	EN 1092-1	185	135	26

function: **NO**
open when not energized (A ▶B)

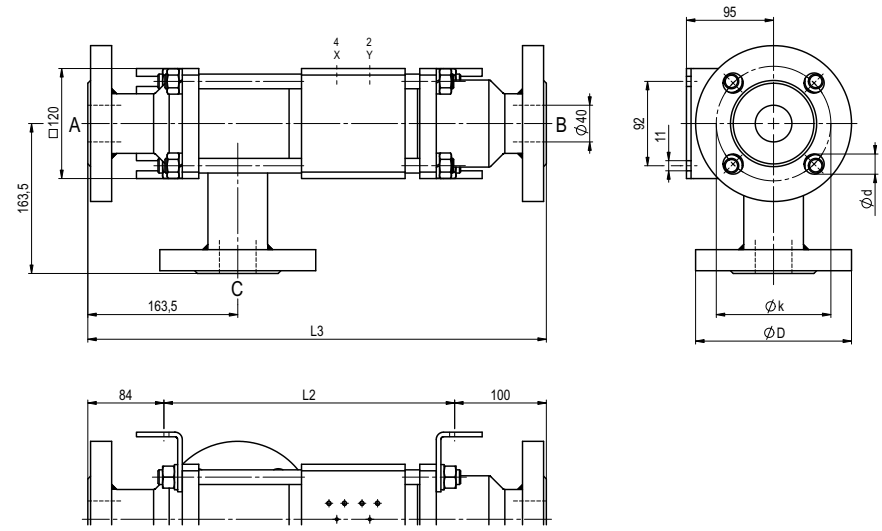

pneumatic specifications

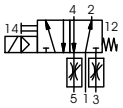

5/2 way pilot valve
flow rate 700 l/min
pressure range 3-10 bar G 1/8

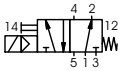

5/2 way pilot valve ISO 1
flow rate 700 l/min
pressure range 3-10 bar G 1/4

müller co-ax shall retain the rights to these documents. Modifications to the documents are strictly prohibited.
Rights reserved to make technical alterations • Not responsible for printing errors • Detailled drawings can be obtained upon request

coax® data sheet - coaxial valve

type VMK-H 50 DR
VFK-H 50 DR

09/2022



3/2 way valve	**externally controlled**
pressure range	PN 0-200 bar
orifice	DN 50 mm
connection	thread/flange
function	valve normally closed (A ▶B) symbol **NC**

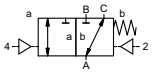

	valve normally open (A ▶B) symbol **NO**

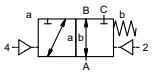

operating principle	pressure balanced, with spring return, intersecting switch-over
body material	① ② steel galvanized ③ ⑤ without non-ferr. Metals ④ steel, nickel plated ⑥ stainless steel
valve seat	synthetic materials on metal
seal materials	NBR PTFE, FPM, CR, EPDM

⚠ Above stated body materials refer to the valve port connections that get in contact with the media only!

details needed for main valve

- orifice
- port
- function NC/NO
- operating pressure
- inlet pressure at A, B or C
- flow rate
- media
- media temperature
- ambient temperature
- type of actuation

details needed for pneumatic actuation

- nominal voltage
- type of protection
- actuation pressure range min/max
- pilot valve type

details needed for hydraulic actuation

- actuation pressure range min/max
- hydraulic control valve function

⚠ The valves' technical design is based on media and application requirements. This can lead to deviations from the general specifications shown on the data sheet with regards to the design, sealing materials and characteristics.

⚠ If order or application specifications are incomplete or imprecise there exists a risk of an incorrect technical design of the valve for the required application. As a consequence, the physical and / or chemical properties of the materials or seals used, may not be suitable for the intended application. To avoid hydraulic shocks in pipelines, the flow velocities must be taken into account when designing valves for liquids.

general specifications			**options**
ports	VMK-H	threads G 2	special threads
	VFK-H	flanges PN 160 / 250	special flanges
function		NC	NO
pressure range	bar	0-200	
		A ⇨ B max. 200 / B ⇨ A max. 16 / A ⇨ C max. 200 / C ⇨ A max. 200	
Kv value	m^3/h	43.0	
vacuum	leak rate		< 10^{-4} mbar•l•s^{-1}
pressure-vacuum	$P_1 \Leftrightarrow P_2$		
back pressure	$P_2 > P_1$	see pressure range	
media		gaseous - liquid - highly viscous	
abrasive media			available
damping	opening		
	closing	by throttles on pilot valve	
flow direction		see pressure range	
switching cycles	1/min	100	
switching time	ms	opening 100-3000	
		closing 100-3000	
media temperature	°C	direct mounted pilot valve 60	remote mounted pilot valve outside
ambient temperature	°C	direct mounted pilot valve 50	temperatur range of media max. 160 °C
flush ports			available
leak ports			available
limit switches			inductive
manual override		via pilot valve	
approvals			LR/DNV/WAZ
mounting			mounting brackets
weight	kg	VMK-H 19.5 VFK-H 31.4	
additional equipment			upon request

electrical specifications			**options**
nominal voltage	U_n	DC 24 V	special voltage upon request
	U_n	AC 230 V 50 Hz	special voltage upon request
power consumption	DC	4.8 W	2.5 W (actuation pressure range 4-7 bar)
	AC	pick up 11.0 VA holding 8.5 VA	
protection	IP65 (P54)	acc. DIN 40050	
energized duty rating	ED	100%	
connection		plug acc. DIN EN 175301-803 form B, 2 positions x180° / wire diameter 6-8 mm	
optional	M12x1	connector acc. DESINA	connector acc. VDMA
additional equipment		illuminated plug with varistor	
max. temperature	media	60°C	
	ambient	50°C	
explosion proof	E Ex e II T5	nominal voltage U_n	DC 24 V 3.25 W
		power consumption	AC 230 V 50 Hz 2.90 W

pneumatic specifications			**options**
actuation pressure range	bar	4-8	
air consumption	cm^3/stroke	65	
cycle speed		main valve speed variable by throttleson pilot valve	
control		preferably 5/2 way pilot valve	
pilot valve interface		co-ax / Namur	ISO 1
actuator ports	2/4	G 1/8	G 1/4

hydraulic specifications			**options**
actuation pressure range	bar	15-30 / 30-60	
control		preferably 4/2 way control valve	
actuator ports	X/Y	G 1/4	NPT 1/4
by media			

- specifications not highlighted are standard

specifications highlighted in grey are optional

müller co-ax gmbh • Friedrich-Müller-Str. 1 • 74670 Forchtenberg • Germany • fon +49(0)7947/828-0 • fax +49(0)7947/828-11 • Email info@co-ax.com

coax® data sheet - coaxial valve

type VMK-H 50 DR
VFK-H 50 DR

function: **NC**
closed when not energized (A ▶B)

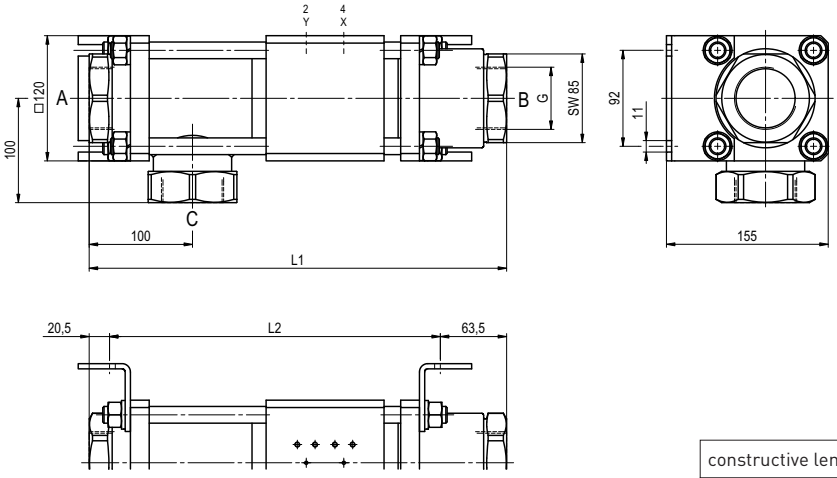

constructive length	L1	L2	L3
standard	400	316	500
with inductive limit switches	400	316	500
with force-feed lubrication nipple	400	316	500
with mechanical limit switches	-	-	-

flanges PN	DIN	ØD	Øk	Ød
160	EN 1092-1	195	145	26
250	EN 1092-1	200	150	26

function: **NO**
open when not energized (A ▶B)

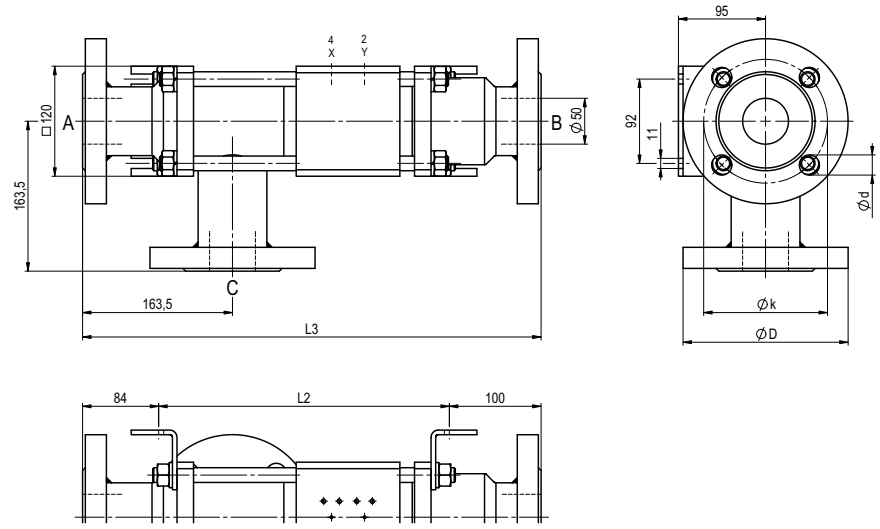

pneumatic specifications

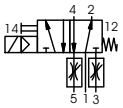

5/2 way pilot valve
flow rate 700 l/min
pressure range 3-10 bar G 1/8

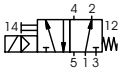

5/2 way pilot valve ISO 1
flow rate 700 l/min
pressure range 3-10 bar G 1/4

müller co-ax shall retain the rights to these documents. Modifications to the documents are strictly prohibited.
Rights reserved to make technical alterations • Not responsible for printing errors • Detailled drawings can be obtained upon request